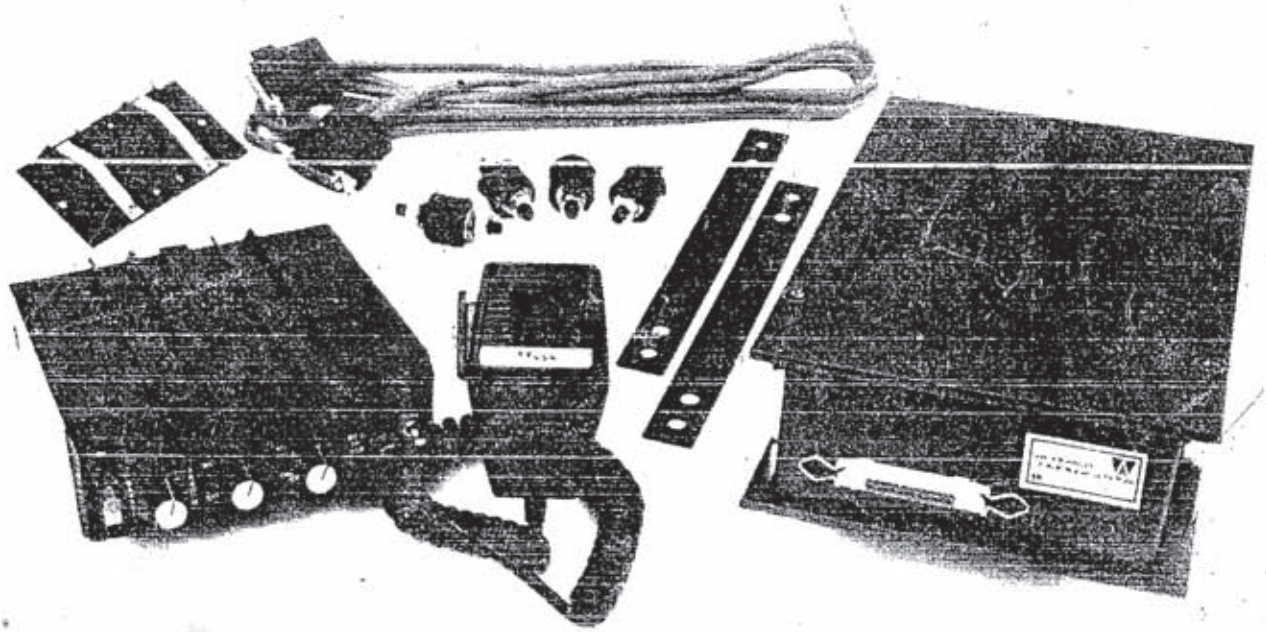

INDEX

1.0 SECTION ONE

GENERAL INFORMATION

The RFK105 range of low profile H.F. Transceivers have an output power of 25, 50, or 100 W PEP and are fully solid state. The standard unit is supplied for 12V DC supply but can, on demand, be modified for 24V DC. A wide range of control units are available to accommodate different system requirements. The RFK105 is easily adaptable for individual special requirements.

Standard control head (LCO) supplied with the transceivers is an easy to fit unit, Ex under dash mount or in console. Equipped with the standard controls and speaker, this unit can be equipped with following plug in options.

a) Digital frequency read out.
b) Clarifier.
c) Selective calling and receiving.
d) Channel scan.

ANCILLARY EQUIPMENT

RFK105 M.A.T.U. - Manual Antenna Tuning Unit.
RFK105 N.B. P.S. -"No Break" Power Supply Unit.
RFK105 R.C.U. - Remote Control Unit.
Options - Mute, Intercom, Remote Channel Change, R.F.D.S., Encoder - Decoder.
RFK105 L.C.U. - Local Control Unit. (L.C.O. fitted in desk top Case)
RFK105 L.K.U. - Line Keying Unit.
RFK105 Carrypack - Portable Transceiver with Control Head and M.A.T.U.
RFK105 Batt. Supply Pack - Used in conjunction with the Portapack.
RFK105 P.S.U. - Power Supply Unit.
Details on this equipment will be made available on request.

Handbooks are available for every equipment and can be obtained from the factory.

2.0 SECTION TWO

OPERATING INSTRUCTIONS

WHEN USING TRANSCEIVER IN CONJUNCTION WITH RFK 105 M.A.T.U. MANUAL ANTENNA TUNER

Connect transceiver antenna socket to M.A.T.U. input and antenna to M.A.T.U. output. Switch the aerial coupling to 1, the load to 5, and depress the tune switch on the radio. Switch the Tune knob for a reading on the meter. Rotate the load control for maximum reading. Switch the Tune control to the next position and re-adjust the load control. Select the combination that gives the highest meter reading.

If a long aerial wire is used on high frequencies it will be necessary to switch up the aerial coupling to achieve maximum meter deflection.

MOBILE OPERATION (WHIP ANTENNA)

The RFK 105 transceiver will operate from vehicle 12V D.C. power supplies whether positive or negative earth.

Connect power plug to vehicle supply.

Connect antenna to transceiver socket. Ensuring that whip antenna is in place.

Set OFF/ON switch to "ON". Adjust volume control to a suitable level.

Select the required channel.

Set mute switch to "ON". Adjust mute control to eliminate noise.

Transceiver is now ready for operation.

OPERATING INSTRUCTIONS

FIXED LAND STATION: When operating in to a pre-tuned antenna.

Transceiver should not be placed on top of RFK 105 P.S.U.

Connect 12V D.C. output of Power Supply Unit to 12V D.C. input of transceiver.

Connect antenna to female antenna socket of transceiver.

Switch Power Supply Unit "ON". The indicator lamp will glow.

Switch on Transceiver, and adjust volume control to a suitable level.

Select Channel.

Select Mode.

Place Mute Switch in the "ON" position until a point is reached where background noise is eliminated. (In the case of very weak signals, it may be necessary to turn the mute OFF completely).

It is recommended that mute be turned off completely during an "over".

The transceiver is now ready for operation.

3.0 SECTION THREE

GENERAL SPECIFICATIONS

All specifications have to be read for our production equipment as same or better. The tests are based on a DC supply of 12.6V and the unit interconnected with the control head. Output impedance of the test instruments should be 50 ohm and the same applies for their input

TRANSCEIVER

Size - without control head:	L 305 mm, W 180 mm, H 75 mm
Weight:	Approx. 3.5Kg.
Frequency Range:	2 - 16 MHz
Operation Mode:	Single Side Band (A3J)
Crystal Capacity:	12
Channel Capacity:	10 Channels. Channel 9 and 10 may be used for two simplex otpion.
Frequency Stability:	± 50 Hz over the range 5 - 55°C. ± 60 Hz over the range 0 - 60°C. Measured with an input voltage variation of ± 10%.
Audio Frequency Response:	300 to 2800 Hz (-6dB)
Audio Power & Distortion:	2.5W ⩽ 10%
Clarifier range for Rx & Tx:	The clarifier is continuously variable and varies ± 0.0007% of SCF or ± 25 Hz whichever is greater.
Controls:	See separate section Remote Control Unit.

Supply voltage is 12V nominal and the unit is reverse voltage protected. The supply can be positive or negative grounded and is supplied through a flying lead with connector.

Control of the unit is done by means of a 25 way cable, the connection is on the opposite side of the heatsink.

The antenna connector has a nominal output of 50 ohms and variation of the impedance of the load producing a V.S.W.R. less than 2:1 will have no noticeable influence on the operation of the unit

TRANSMITTER

The transmitter consists of two PCB's, the actual P.A. and the exciter. (The channel frequency is generated on the front end P.C.B.).

Power Output - for 12V:	RFK105A 100W P.E.P. RFK105B 50W P.E.P. RFK105C 25W P.E.P.
Power Output - for 24V:	RFK105D 100W P.E.P. RFK105E 50W P.E.P. RFK105F 25W P.E.P.
Spurious & Harmonic Emissions:	Better than 45 dB for all emissions removed at least 10KHz from suppressed carrier frequency.
Carrier Suppression:	The suppression is better than 45 dB below P.E.P.
Unwanted Sideband:	For 400 Hz better than 50 dB below P.E.P.
Intermodulation Products:	Better than 32 dB below P.E.P.
Audio Frequency Response:	The overall response rises at approximately 6 dB/octave from 300 to 2800 Hz for microphone and transmitter.
A.L.C. Range:	An increase of 30 dB of input signal above the threshold of the compression amplifier will produce an output of less than 1 dB in the P.A.

RECEIVER

The receiver circuit is spread over two PCB's; the front end and the I.F. PCB. The conversion is done as a single and in the super heterodyne form. The I.F. frequency is 1650 Kz.

Sensitivity

This is better than 0.5uV P.D. from 50 ohm for 10 dB S+N/N (In A3J mode).

Selectivity

Greater than 60 dB at -1 and +5 KHz ref SCF USB (In the A3J mode).
Less than 6 dB from 300 to 2800 Hz.

Image Rejection

Better than 65 dB for 2 - 10 MHz. and 55 dB for 10 - 16 MHz.

Spurious Signal Rejection

The rejection is better than 60 dB.

Blocking (1)

A change in output level of the correct signal of less than 3 dB shall occur when a signal of 80 dB above a signal producing a 10 dB S+N/N and spaced at least 20 KHz from the correct signal is injected.

Intermodulation (1)

To produce a third order product equivalent to a wanted signal giving 10 dB S+N/N, two unwanted signals greater than 30 KHz removed from the tuned frequency must be greater than 65 dB relative to the wanted signal.

Cross Modulation (1)

For a wanted signal giving 10 dB S+N/N, an unwanted signal of +65 dB relative level and separated from the carrier frequency by at least 30 KHz will cause less than 3 dB increase in noise output from receiver.

(1) These three specifications comply with the Australian Communications Department Specifications RB 209.

A.G.C. - The Automatic Gain Control gives less than 3 dB variation on the output for a variation of 10 uV to 100mV P.D. on the input.

Input Voltage - Nominal 12V. The transceiver will safely operate with input voltages between 11V and 15V, positive or negative ground (chassis is electrically isolated) . Reverse polarity and over-voltage protection is provided..

Power Consumption - On receive with no signal 0.25 amp. On transmit (A3J two tone) 10 Amps average, 25 Amps Peak

4.0 SECTION FOUR

TECHNICAL DESCRIPTION

CHANNEL SELECTION

The channel switch is encoded in the control head into a binary coded format. The A, B, C, D, binary coded linescome into the Channel switching board where IC1 decodes the binary information back to 1 of 12 lines. On channel 9 and 10 the equipment is capable of a duplex operation option and this is switched in by TR1. Both channel 9 and 10 pull the D line high and on Transmit TR2 collector is pulled low. This combination of signals turns on TR1 which pulls the C line high switching IC1 to channel 11 on Receive 9, and channel 12 on TX when receiving Channel 10. If TR1 is not fitted channel 11 and 12 may be used normally.

The appropriate output line of IC1 goes low when a channel is selected, turning on one of the inverting buffer transistors TR3 to TR14. The collector of this transistor goes high, and via SK3 turns on the appropriate channel on the front end board.

The appropriate harmonic aerial filter is selected for each channel by jumpering a diode from the selected channel to the filter which covers the frequency of that channel.

RECEIVER AND EXCITER I.F. BOARD

VOLTAGE REGULATORS AND SWITCHING

10V REGULATOR

The 10 volt regulator is made up of TR10, 11, 12 and 13 The base emitter junction of TR10 is used as a zener diode reference for the regulator and holds the base of TR11 stable at approximately 5.7 volts. The emitter of TR11 is connected to the emitter of TR13 and the base voltage of TR13 is derived by dividing the 10 volt rail. If the 10 volt rail goes high in voltage, the base of TR13 goes higher, and being an emitter follower so does the emitter. This pulls the emitter of TR11 higher and reduces the base - emitter voltage lowering the collector current in TR11. Most of the collector current of TR11 flows through the base of TR12 and if this is lowered so is the collector current of TR12 which reduces the 10 volt rail back down until a steady state is reached. In the steady state condition the base voltage of TR13 equals that of TR11. By adjusting VR2 and altering the ratio of the voltage divider to the base of TR13 the regulated output voltage can be adjusted.

6V REGULATOR

The 6 volt regulator is an integrated circuit IC9. The input is derived from the regulated 10 volt rail. Depending on the output voltage of IC9, R67, R68 may not be used. If IC9 is a 6 volt regulator, R67 is deleted and R68 is replaced by a wire link. If a 5 volt regulator is used R67, R68 raise the reference of the I.C. up 1 volt to produce a 6 volt output.

P.T.T. SWITCHING

The PTT button and the tune button, via D6 are coupled via C76, C77 to one input of a voltage comparator IC10. The other input has its voltage preset by VR3.

When the PTT button is depressed C76, C77 start charging through R64 and when the voltage exceeds the voltage set by VR3 the output of IC10 goes high, switching the set back to receive.

P.T.T. SWITCHING - CONT'D

This circuit ensures that the equipment cannot be accidentally left on transmit due to the microphone button being jammed on. The output of IC10 turns on TR14, in the receive mode, which turns on TR17. In the transmit mode TR14, TR17 are off and TR15 and TR16 are turned on supplying power to the appropriate circuits. The outputs of TR14 and TR16 are low when they are on, and TR15 and TR17 are at 6V when turned on.

RECEIVER

The aerial input to the receiver first passes through the V.S.W.R. bridge and the antenna changeover relay RL6, followed by the Broadcast filter. The Broadcast filter is a high pass filter with a cut-off frequency of 2MHz. After the Broadcast filter it passes down the interconnecting coax cable to the Front End board and into T1. The receiver input is protected against strong local transmitters and nearby lightning strikes by the back to back diodes D1 and D2.

T1 gives an impedance step up on its secondary winding, and via diodes D3, D7 drives the first tuned circuit, L1, of the channel selected by the channel select lines.

L1 gives some selectivity before the signal is coupled via R10, C12 into Gate 1 of the dual gate Mosfet R.F. amplifier TR2. Gate 2 of TR2 is biased and decoupled by R13, R14, C13. The drain of TR2 is coupled to the channel selected tuned circuit L2 by diode D8. L2 is top coupled to L3 by C18, and these two tuned circuits provide the main selectivity of the Front End circuit. The output of L3 is buffered by the high input impedance fet follower TR4 which drives the low output impedance emitter follower TR5. The output of TR5 is coupled via the diode switch D5 into the wideband transformer T2, whose secondary winding drives the double balanced mixer CM-1.

RECEIVER - CONT'D

The local oscillator injection is provided by TR6, TR7, TR8, TR9, TR10. TR6 is the oscillator with the crystal to be used selected by the channel select line and diode D12. D23 is the collector load of the oscillator and C23, C22, in series with the crystal, give the crystal the correct load capacitance to operate on the nominated frequency. The output level of TR6 is amplified by TR7 and the level is detected by D14. As the level increases the output of D14 goes more positive turning off TR8. The collector of TR8 is connected via R30, R24 to the base of TR6 and provides the oscillator bias. This stabilizes the oscillator output and ensures minimin drive on the crystal and hence maximum stability. C26 filters the oscillator bias line, and R26, D13 ensure that the bias to TR6 does not cause it to go into saturation during periods when it is not oscillating. The output from the collector of TR7 is amplified by the FET TR9, with some high frequency peaking provided by C30. The output of TR9 is buffered by the emitter follower TR10 which drives the mixer via R40, C32.

The mixer output goes via L5, L6, T4 and the noise blanker gate IC1a, IC1c to drive the crystal filter and I.F.

The clarifier cirucit, when fitted, can operate on Rx only or Rx and Tx. If it is jumpered to the 10 volt rail, the clarifier operates on Rx and Tx, and if it is jumpered to the Rx 6 volt rail, it operates on Rx only. When TR5, TR1 are off, the bias on the varicap diodes D15, D16 is set by R57 & R58 to approximately the mid point of their capacitor range.

The noise blanker amplifies the I.F. output from the mixer in IC2, IC3. Board tuning is provided by L7, L8 to give rejection of unwanted signals but still maintain a fast risetime of ignition noise through the amplifiers. The output of IC3 is peak detected by the base - emitter junction of TR12 and the collector output is averaged by D17, R53, C46 to feed the A.G.C. amplifier TR11.

The collector of TR11 drives the A.G.C. inputs on IC2, IC3 to stop strong signals saturating the amplifiers and stopping the noise pulses. As the A.G.C. operates on average level, noise pulse peaks turn TR12 hard on, and the collector comes below the 6 volts bias on IC1b. IC1a and IC1c switch off the signal to the I.F. for the duration of the noise pulse. The signal form the Front End board comes into the I.F. board on T1 and through the filter select relay, if fitted, to either U.S.B. or L.S.B. filter. The output from the filter is amplified by IC1 and IC2. The output from IC2 drives the balanced mixer IC3. The 1650 KHz carrier oscillator injection comes from the oscillator TR7, whose output is buffered by the collector follower TR5. The oscillator output level is fed through C64 to drive IC3. The difference frequency between the incoming I.F. signal and the carrier oscillator is the wanted audio output from the mixer, and C14 filters this out from the R.F. C15 couples the audio into the audio A.G.C. generator IC4. This I.C. has a very fast attack and approximately a one second delay before decay, giving a hang on the A.G.C. output. The hang on time of the A.G.C. is set to minimize background noise coming up between speech. The A.G.C. output goes through TR1 to IC1 to hold the audio output constant over a wide range of R.F. signal input level. The audio output of IC3 is also split to drive the mute cirucit and the audio amplifier. The mute circuit splits the audio input into two bands and compares the two. If they are equal it assumes noise and closes the mute. If the two are unequal, it assumes that the signal is voice and opens the mute. The audio input is first amplified and clipped by IC5a, and the back to back diodes D1, D2. This gives a constant audio level output which is psdit into two paths. The upper part of the audio spectrum is passed through the 2,000 to 2,700 Hz bandpass filter IC5b and IC5c. The output of IC5c is rectified by IC5d, D3 and filtered by R25, C34. This average audio level is fed to one input of the voltage comparator IC6d.

The low end of the audio band is coupled through the mute gain control to a 600 - 1050 Hz bandpass filter IC6a, IC6b. The output of this filter is rectified by IC6c. D4 and filtered by R24, C33. This average audio level is fed to the other input of the comparator IC6d.

RECEIVER CONTINUED

The gain control is adjusted to give a lower output from 600 - 1050 Hz filter than the 2,000 to 2,700Hz output when there is only noise in the receiver and no voice. This shuts the mute and quietens the radio. When a voice signal is received, there is a higher average low frequency content than high frequency, and the output from the low frequency filter exceeds the output from the high frequency filter. When this happens, the comparator output goes high and via R56, D8, R55 turns on TR9 which turns off TR8 and opens the mute. To stop the mute opening and closing during speech, a delay is put in by C62 to hold the mute open for approx. two seconds. To disable the mute, a switch is inserted in the collector load of TR9 to stop TR8 being turned on and the mute closing. It is necessary to be able to disable the mute as a heterodyne falling in the passband of the 2,000 - 2,700Hz filter could cause the mute to be locked permanently closed and not open on speech.

The audio pre-amplifier, IC11 is also D.C. voltage controlled and this is used to control the volume of the set. The volume control varies the bias on TR18, whose collector voltage controls the gate of the fet TR19. This one in turn will control the gain of IC11, which will influence the audio level.

The output from the audio pre-amplifier is attenuated by R84, R85 and connected to the input of the audio power amplifier IC12. The gain of IC12 is set by R92. C90 and C91 are for frequency shaping and to maintain loop stability in the amplifier. R94 and C88 are also to maintain stability. C94 couples the output to the loudspeaker and C92, R96 provide boot-strapping for the output stage of the amplifer.

TR21 shorts out the audio input to IC12 during transmit, and TR20 holds down the input of the mute comparator. When the set returns to RX, C85 gives a short delay to allow time for the RX to stabilize its D.C. conditions before TR20 and TR21 turn off and allow the receiver to operate.

TRANSMITTER

EXCITER

The microphone input is coupled through the 600 ohm transformer T2 into the balanced input of IC8. C51, C52 remove any R.F. present on the input lines. IC8 is a high gain audio amplifier and compressor, and holds its output constant over a wide range of input level. C50, R41 set the attack and decay time constants of the compressor while C46 sets the high frequency cut-off of the amplifier. The output is coupled through C44, C45 to the signal input of the balanced modulator IC7. 1650 KHz carrier injection is coupled in via C43. The output of IC7 is amplified and buffered by TR4. The output from the collector of TR4 drives the crystal filter and then out to the Front End Board.

In the Tune mode, TR3 is turned off and allows carrier oscillator signal to drive the base of TR2 which is turned on. The output from the collector of TR2 drives the output of the crystal filter and goes via T1 to the Front End Board.

On the Front End Board the signal from the crystal filter passes through the disabled noise blanker gate and into the mixer CM1. The mixer local oscillator injection is the same as on Rx. The mixer output is coupled through T2 and the diode switches D4, D6 route the signal into the input of the R.F. amplifier TR2. The tuned circuits L1, L2, L3 provide high discrimination against unwanted signals as on receive and the output buffer, TR5 is connected via diode switch D10 to T3, which provides a 50 ohm output to drive the P.A. board.

POWER AMPLIFIER

Supply of power to the P.A. section on the Board is applied on PL1 and PL2, the positive is linked through a fuse link to the collection of the output transistors. The remainder of the circuit is supplied through two 2 Amp fuses and filtered by L15 and L16. A link is installed for use with 12 Volt supply, this is removed for 24V supply and the regulator IC3 is put in service dropping the 24V to 12V. The TX switch TR15 supplies power to the P.A. on transmit and also energises the antenna switch over relay. Additionally, positive voltage is applied to the common rail for the harmonic filter relays. The output from the channel switching board switches on one of TR10 to TR14 and the appropriate filter relay is operated.

The R.F. input from the exciter is coupled through transformer T1 into the input of the gain controlled amplifier IC1. The gain of IC1 is determined by the voltage applied to Pin 7 by TR1, which is driven by the ALC circuitry.

The output of IC1 is fed via a frequency compensating network R6, R7, C7 to the base of TR2. This network in conjunction with the feedback resistor R9 determines the stage gain. The output from the collector is transformer coupled to the Class B Push Pull amplifier TR3, TR4. The bias to these transistors is provided by means of TR7 used as a diode configuration. The bias voltage (and hence the standing current) may be increased or decreased by fitting S.O.T. resistor R37, R38 respectively. The output of this stage is transformer coupled to the Class B Push Pull output stage TR5 and TR6. Negative Feedback is provided on the output stage by R17, R18 and the output is transformer coupled to the aerial filter by T5. T4 is the collector D.C. feed choke and also provides the negative feedback winding. A secondary winding of T5 is rectified by D1 to provide indication to the ALC comparator of excessive collector swing on the output stage.

The output stage Bias is supplied by a series regulator transistor TR8. The base junction of TR9 is used as the voltage reference and is connected via R42 to the emitter of TR8. If the emitter voltage of TR8 reduces, TR9 starts to turn off and more current flows into the base of TR8 from R43 to increase the emitter voltage.

The zener diode D8 is provided to prevent power supply fluctuations from varying the bias voltage. TR9 is thermally bonded to the heatsink to provide temperature compensation to the bias circuit. Fine adjustment of the bias voltage is provided by R46, R47 (S.O.T. resitors).

Drive to the bases of TR5, TR6 varies the bias current required to maintain the bias on the transistors. This variation is monitored by the TX L.E.D. on the front panel, giving an indication of transmitter output. (SK1-1 and SK1-10). D7 clamps the voltage on the collector of TR8 from swinging too low.

Five series filters are used to lower the harmonic output of the P.A. The upper frequency limit of each filter band is the cut-off frequency of the filter, and the lower limit for each filter is chosen so that the harmonics always fall in the filter stop band. On the 11 - 16 MHz band, RL5 is operated and signals pass from the P.A. through L10, L11 to the antenna relay. On the 2 - 3 MHz band, RL1 is operated and signals pass through L6 to L11.

The A.L.C. voltage is composed of the signal from three detectors. Voltage is detected on the collectors of TR5 and TR6 by means of T4 and rectified by D1. The forward power is detected by T8 and T9 and this proportional voltage is rectified by D10. The reflected power is detected by T6 and T7 and this proportional voltage is rectified by D9. These three rectified voltages are then fed together and used to generate a voltage through the processor 12 b onto the Gain controlled amplifier. this in turn generates the A.L.C.

Temperature limiter IC2a is connected with the processor (A.L.C.) IC2b and will influence the Gain controller amplifier IC1. The thermister R23 is in a bridge configuration with R20, R21, R22. The inputs of the differential amplifier IC2a are fed by this bridge, at normal temperature the output is high. A rise of temperature on the heatsink of around 90°C will give enough change of resistance in the thermistor to cause IC2a to start to turn on and lower its output voltage. This in turn will act on the inverting input of IC2b which in turn will control IC1 and cause the A.L.C. reference voltage to lower the output power. The Output power is maintained at a lower level and prevents any further rise in heatsink temperature.

The V.S.W.R. detection circuit works as follows:-

With a normal load of 50 ohm, the forward power detector will produce a large output. A mismatch load will increase this voltage, this in turn will control the A.L.C. and maintain a constant collector voltage swing. The reverse power detector will come into action if the load mismatch does not increase the collector voltage swing, the detector will keep the reflected power constant with increasing V.S.W.R.

IC2b has a reference voltage at the inverting pin which will be proportional to the supply voltage at lower level and is constant at higher level. A voltage divider R35, R36 and zener diode D6 in conjunction with a S.O.T. resistor R31 generate this voltage. The bias on IC2b is set by R31, this in turn sets the output power at which the A.L.C. operates. The three different voltages generated by the detectors are fed through a devider R34, R32 and applied through D5 to the non-inverting input of IC2b. The same voltage is also averaged through R33, C27 and fed through D4 to the same input. R27 is the gain control resistor for IC2b. The fast attach and slow decay time of the A.L.C. is given by D3.

5.0 SECTION FIVE

TRANSCEIVER ALIGNMENT

Test Equipment Required:

1. A 12.6V 20A regulated power supply.

2. A calibrated C.R.O. with a flat response to 16MHz.

3. A 50 ohm RF signal generator with a frequency range of 1.650 to 16MHz.

4. An audio voltmeter calibrated with a dB scale.

5. A 30dB 100 watt RF attenuator.

6. A two tone audio signal generator with a 600 ohm balanced output.

7. A frequency counter with an accuracy of better than 0.5ppm and a resolution of 1Hz at 16MHz.

8. Voltmeter 0 - 20V D.C.

I.F. ALIGNMENT

Remove the plug from the I.F. board socket SK2. Connect a multimeter set to an appropriate scale to read 10 Volts to the collector of TR12 (case). Set VR2 (10V set) and VR3 (Timer) to mid range. Connect a power supply, set to 12.6 volts, to the radio and switch on. Adjust VR2 for 10V indicated on the multimeter.

Connect a dB meter across the speaker leads. Switch off the mute. Connect a signal generator to the crystal filter FL1 (Top of C1) with a 1000 ohm resistor in series with the R.F. lead. Set the output E.M.F. of the signal generator to 5uV, and adjust the frequency (approximately 1650KHz) to produce a 1000Hz tone out of the speaker. Adjust the volume control to give a convenient reading on the dB meter. Switch off the R.F. from the signal generator and note the output level change in dB. This should be greater than 10dB.

To check the mute circuit switch the signal generator back on and adjust the frequency to give a 900Hz tone out of the speaker. Turn the mute control to mid travel and check RX green LED stays on. Adjust signal generator to give a tone of 2200Hz and check LED extinguishes. After approximately two seconds the speaker audio should be muted.

Disconnect the signal generator and connect an accurate frequency counter to the same point on the filter. Operate the tune button and adjust C60 to give a frequency of 1650KHz. Disconnect the counter and connect an oscilloscope to the filter. Operate the PTT and speak into the microphone. Check that the level is approximately 600mV Peak to Peak.

Connect the oscilloscope to the other side of the filter (i.e. C2). Operate the PTT with the microphone disconnected or covered (i.e. no audio input), adjust VR1 for minimum 1650KHz carrier.

Operate the P.T.T. and time how long the set takes before it switches back to receive. Adjust VR3 for the required time. Maximum obtainable is approximately five minutes.

FRONT END AND OSCILLATOR ALIGNMENT

Check that all the channel components are correctly installed, and the plugs are correctly inserted into SK1 and SK2. Connect the Rx IN coax, disconnect the Tx O/P coax and short ends together. Connect a lead terminated in 50 ohms to the Tx O/P pins. Connect an oscilloscope across the 50 ohm termination.

Connect a signal generator to the antenna socket of the radio and a dB meter across the speaker leads.

Switch on the radio and set the signal generator to give a 1KHz tone out of the speaker at a low signal to noise ratio. Adjust L3, L2, L1 for best signal to noise ratio, reducing the O/P from the signal generator as necessary. Go back and recheck L3, L2, L1. Set the signal generator to 0.5uV P.D. and check the signal to noise ratio is greater than 10dB.

Repeat the above procedure for each channel fitted. Check the Tx output of the board by operating the tune button and checking the R.F. output on the C.R.O. for a peak to peak level of between 100 and 200mV. If the level is outside these limits C18 may be increased or decreased in value.

To set the channel frequency connect an accurate frequency counter across the 50 ohm termination and operate the tune button. Adjust C23 until the correct frequency is obtained. In some cases, it may be necessary to adjust C22 in order to achieve the correct frequency.

Repeat the above process for each channel.

Select a pre-aligned channel and adjust the output level of the signal generator to 3uV at a frequency 1000 Hz above the SCF. Place a C.R.O. probe on pin 3 of IC3 and adjust L7 and L8 for maximum level on Pin 3. Incrase the R.F. input level and check that the level on Pin 3 comes into compression at about 10uV.

POWER AMPLIFIER ALIGNMENT

Disconnect the coax drive lead from the input of the P.A. or select an unused channel. Disconnect F1 and open the link (J3 - J4) to the collectors of the driver transistors.

Insert a DC ammeter in place of the driver collector link. Switch on the radio and operate the P.T.T. Select R35 or R37 to obtain a current of 50mA ± 5mA.

Insert the DC ammeter in place of the collector fuse F1 of the output stage. Key the set. Adjust VR2 (Bias) to obtain a current of 450mA ± 50mA.

Connect the collector link to the drivers and the Fuse to the output stage. This fuse consists of two strands of 0.25mm copper wire. Reconnect the drive to the input of the P.A.

Connect a 100 watt power meter and load or 30dB attenuator, to the aerial socket. Attach an oscilloscope across the aerial socket, or to the output of the attenuator. On a multi-channel set select a central frequency. Inject a two tone (1000Hz and 1600Hz) audio signal into the microphone socket at a high enough level to bring the microphone amplifier into compression. Key up the transmitter. Check the peak envelope power level on the C.R.O.

POWER OUT P.E.P.	AERIAL SOCKET	30dB ATTENUATOR
100 Watts	200V P-P	6.3V P-P
50 Watts	141V P-P	4.4V P-P
25 Watts	100V P-P	3.1V P-P

Adjust VR1 (PWR) to give the required reading. The reading obtained on the power meter will vary with the meter type. Check the power meter handbook for the appropriate correction factor. E.g. Bird Model 43 reads 40.5 watts for 100 watts P.E.P. Check each channel fitted for power output within ± 1dB of the set up channel power.

POWER AMPLIFIER ALIGNMENT CONTINUED

To check the over-temperature sensor, key up the TX at full power and short out the thermistor R31. The power output should drop to approximately 20 Watts P.E.P.

6.0 SECTION SIX

CHANNEL ADDITION

The following components are required to add an extra channel to an RFK 105 Transceiver.

DESCRIPTION		STORES CAT.	QTY.
Resistor	100 ohm ¼ W 5%	0237	1
Resistor	470 ohm ¼ W 5%	0245	1
Resistor	4K7 ¼ W 5%	0257	1
Resistor	10K ¼ W 5%	0261	1
Diode	1N4148	2302	6
Capacitor	Ceramic 0.1uf	1015	3
Capacitor	Trimmer 2 - 5pf	2011	1
Front End tuning coils		See Graph	3
Oscillator load capacitor		See Text	
Channel crystal		See Text	
Front End coupling capacitor		See Graph	

Select the correct coil and capacitor combination from the channelizing graph.

The channel tuning and oscillator components are fitted as per Drawing No. 4.A.12.1.3. The channel crystal fitted must be 1650KHz higher in frequency than the suppressed carrier frequency. The oscillator load capacitors which are nominally 33pf NPO ceramic capacitors can be supplied by the factory to suit the temperature characteristics of the crystal.

The channel oscillator and tuning components must be positioned on the front end PCB in the same order in which their frequencies appear on the channel select switch. If two frequency simplex operation is required R3, R4, D1, TR1 and D3 on the Channel Switching Logic PCB are fitted. In this case when channels 9 and 10 are being used the transceiver will receive on 9 and 10 at the frequencies set by their associated oscillators. On transmit the transceiver will automatically switch over to oscillators 11 and 12 respectively. A wire link must be connected from TP11 or TP12, as the case may be, to the front end tuning circuits to be used on transmit. Refer to Drawing No. 4.A.12.1.3. If the transmit and receive frequencies are within 1% of each other the same front end wiring section may be used for both functions.

The correct P.A. filter must be selected by fitting a diode on the diode matrix of the Channel Switching Logic PCB. Refer to Drawing No. 4.A.12.7.3. A diode must be fitted to select the appropriate filter for each channel being used. The frequency range of each filter is:-

FILTER	FREQUENCY RANGE MHZ
1	2 - 3
2	3 - 4,6
3	4,6 - 7
4	7 - 11
5	11 - 16

For two frequency simplex channels only the transmit frequency is considered for filter selection.

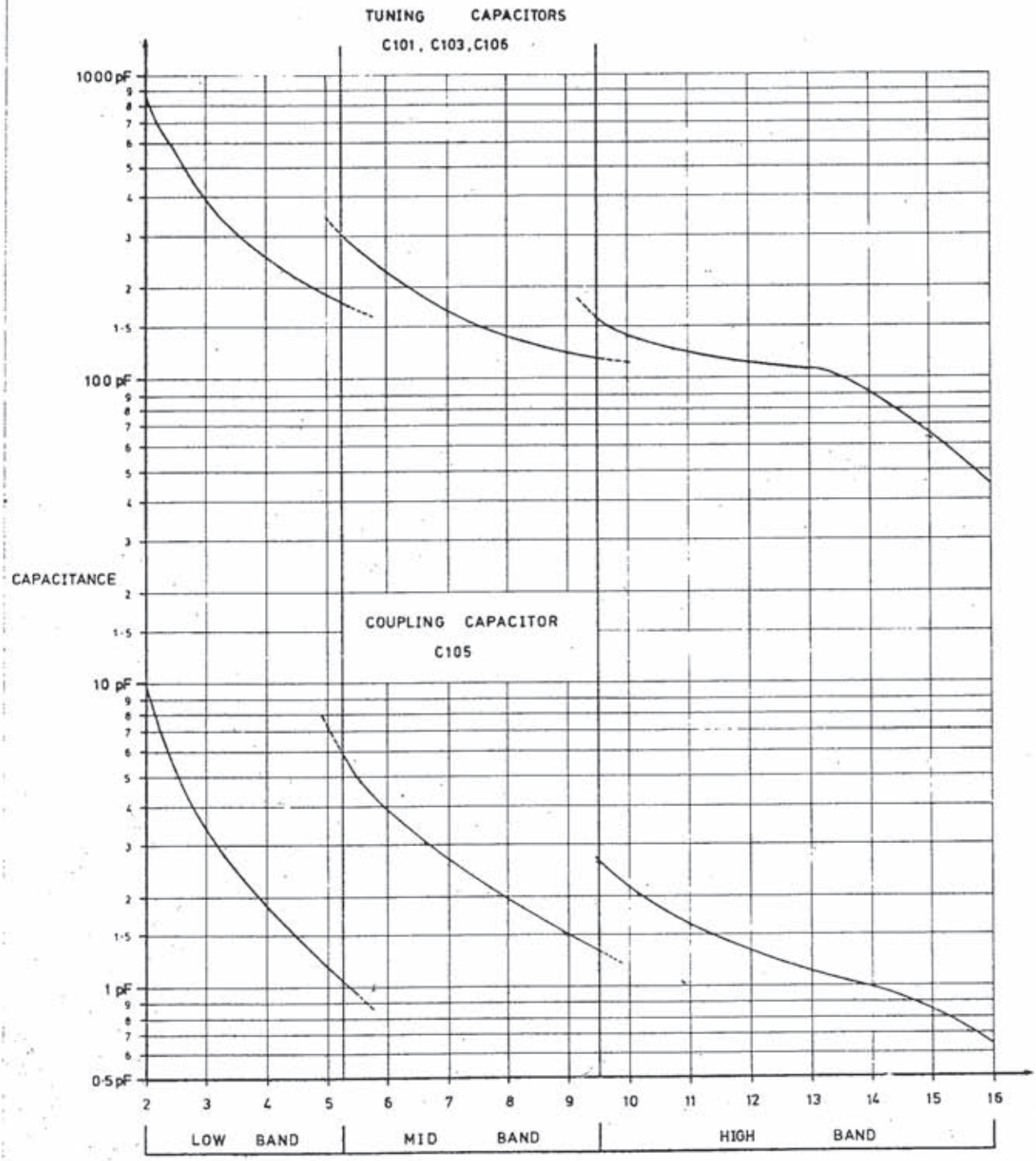

COIL SELECTION / L101, L102, L103		
FREQ. BAND	COIL Nº	STORES CODE
LOW	F772	L101·1L
MID	F771	L101·1M
HIGH	F747	L101·1H

NOTE:- L101, L102 & L103 ARE IDENTICAL COILS

ALL CAPACITORS ABOVE 100pF ARE POLYSTYRENE

E.g. PHILIPS 427.

CAPACITORS 100pF & BELOW ARE CERAMIC NPO

E.g. PHILIPS 632.

REV	ECN	BY	DATE

TITLE- GRAPHIC DIAGRAM

CHANNELIZATION GRAPH

DRAWING No. 4·A·46·1·3		MODEL R.F.K.105	
DESIGNED	DRAWN G.M.	CHECKED P.L.	
SCALE	DATE 10/4/80	SHEET 1 OF 1	

WORMALD COMMUNICATIONS 13 MUMFORD PL BALCATTA WESTERN AUSTRALIA

7.0 SECTION SEVEN

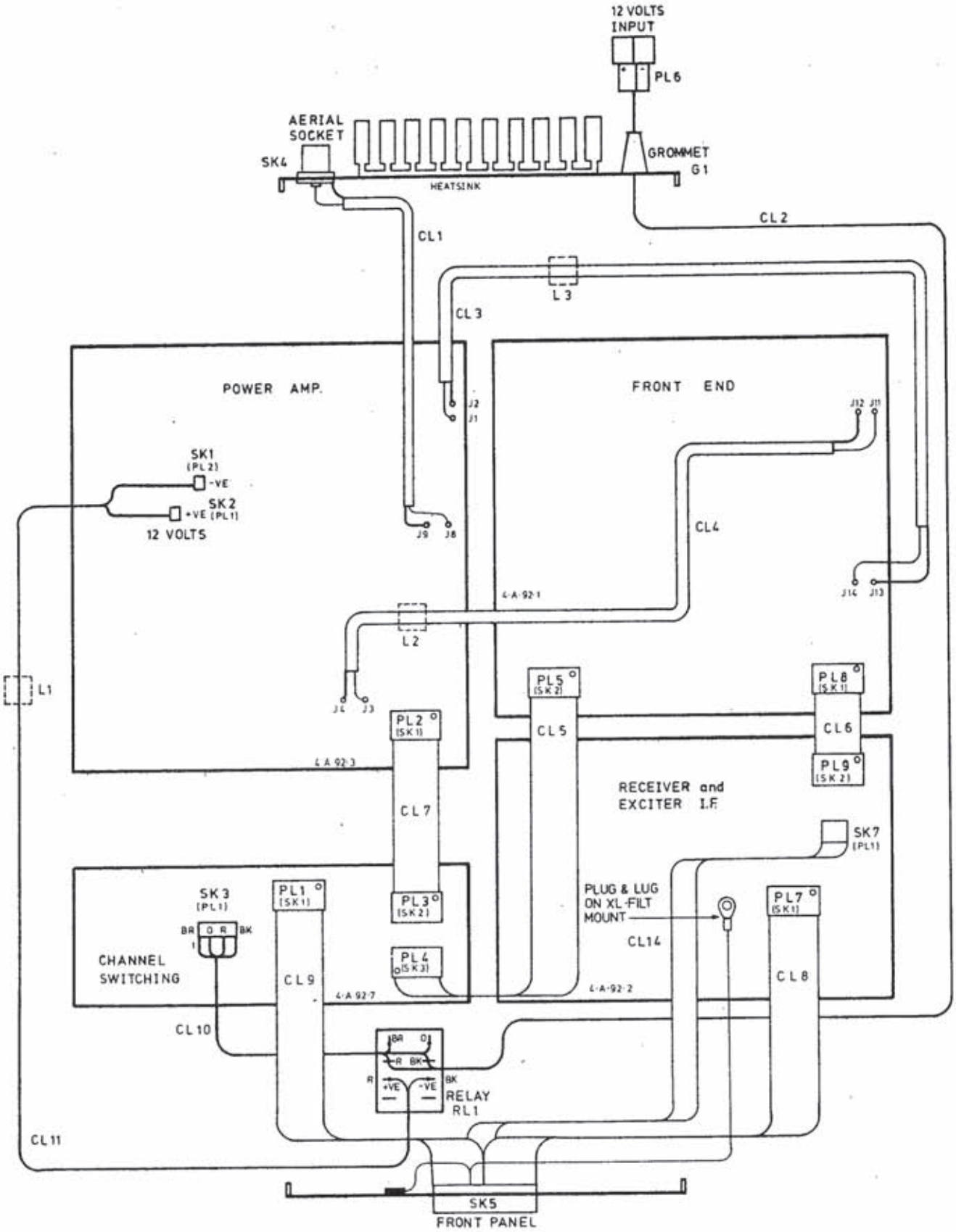

NOTE:- SEE INTERCONNETION DIAGRAM 4-A-30-10-1 FOR EMERGENCY CALL OPTION.

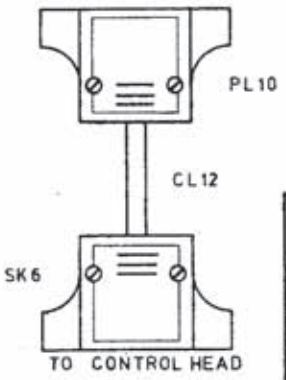

TITLE INTERCONNECTION DIAGRAM S.S.B. BOARD INTERCONNECTION			
DRAWING No. 4·A·30·50·2		MODEL R.F.K. 105	
DESIGNED	DRAWN G.M.	CHECKED P.L.	
SCALE	DATE 12/3/80	SHEET 1 OF 1	
WORMALD COMMUNICATIONS 13 MUMFORD PL BALCATTA WESTERN AUSTRALIA			

CCT.REF	DESCRIPTION	STORE CODE	MFG	MFG CODE
A1.50	CCT.BOARD; FRONT END	4.A.92.1.7	WOCO	4.A.92.1.7
A2.50	CCT.BOARD; RCVR & EXC I.F.	4.A.92.2.9	WOCO	4.A.92.2.9
A3.50	CCT.BOARD; POWER AMP	4.A.92.36	WOCO	4.A.92.3.6
A4.50	CCT.BOARD; P.A. TRANSFORMER	4.A.92.4.2	WOCO	4.A.92.4.2
CL1.50	CONNECTION LEAD; RG178		WOCO	CL1.50
CL2.50	CONNECTION LEAD; TWIN AUTO		WOCO	CL2.50
CL3.50	CONNECTION LEAD; RG178		WOCO	CL3.50
CL4.50	CONNECTION LEAD; RG178		WOCO	CL4.50
CL5.50	CONNECTION LEAD; RIBBON		WOCO	CL5.50
CL6.50	CONNECTION LEAD; RIBBON		WOCO	CL6.50
CL7.50	CONNECTION LEAD; RIBBON		WOCO	CL7.50
CL8.50	CONNECTION LEAD; RIBBON		WOCO	CL8.50
CL9.50	CONNECTION LEAD; RIBBON		WOCO	CL9.50
CL10.50	CONNECTION LEAD; RIBBON		WOCO	CL10.50
CL11.50	CONNECTION LEAD; TWIN AUTO		WOCO	CL11.50
CL12.50	CONNECTION LEAD; SHIELDED MULTICORE		WOCO	CL12.50
CL13.50	CONNECTION LEAD; RIBBON		WOCO	CL13.50
CL14.50	CONNECTION LEAD; RIBBON		WOCO	CL14.50
G1.50	GROMMET	7301		WH137
L1.50	CHOKE RF	3035 2off CORE	WOCO	L1.50
L2.50	CHOKE RF	3031 3off CORE	WOCO	L2.50
L3.50	CHOKE RF	3031 3off CORE	WOCO	L3.50
PL1.50	PLUG; 14 PIN DIL	4452	AMPH	FRC-D14
PL2.50	PLUG; 14 PIN DIL	4452	AMPH	FRC-D14
PL3.50	PLUG; 14 PIN DIL	4452	AMPH	FRC-D14
PL4.50	PLUG; 14 PIN DIL	4452	AMPH	FRC-D14
PL5.50	PLUG; 14 PIN DIL	4452	AMPH	FRC-D14
PL6.50	PLUG: POWER CONNECTOR	4010	UTIL	
PL6.50	PLUG; SPADE TERMINAL	4105 2off	UTIL	
PL7.50	PLUG; 14 PIN DIL	4452	AMPH	FRC-D14
PL8.50	PLUG; 14 PIN DIL	4452	AMPH	FRC-D14
PL9.50	PLUG; 14 PIN DIL	4452	AMPH	FRC-D14
PL10.50	PLUG; 25 PIN D CONNECTOR	4430	AMPH	
PL10.50	PLUG: COVER	4432	AMPH	
PL11.50	PLUG; 14 PIN DIL	4452	AMPH	FRC-D14
PL12.50	PLUG; 14 PIN DIL	4452	AMPH	FRC-D14
RL1.50	RELAY; OMRON	5009	OMRN	L42F DC 12V
SK1.50	SPADE SOCKET	4504	UTIL	
SK2.50	SPADE SOCKET	4504	UTIL	
SK3.50	SOCKET; 4 PIN MOLEX	4001	MOLX	
SK4.50	SOCKET; UHF CONNECTOR	4337	ACME	C32-8
SK5.50	SOCKET; 25 PIN D CONNECTOR	4431	AMPH	
SK5.50	LOCK	4433	AMPH	
SK6.50	SOCKET; 25 PIN D CONNECTOR	4431	AMPH	
SK6.50	COVER	4432	AMPH	
ST1.50	SOLDER TAG	4514	UTIL	H3140
ST2.50	SOLDER TAG	4510	UTIL	H252

REV	ECN	BY	DATE

TITLE PARTS LISTING - 4.A.23.50.1
SYSTEM INTERCONN. - RFK105

DRAWING No | MODEL

DESIGNED | DRAWN | CHECKED
SCALE | DATE | SHEET OF

WORMALD COMMUNICATIONS 98 Guthrie Street Osborne Park 6017 W.A.

8.0 SECTION EIGHT

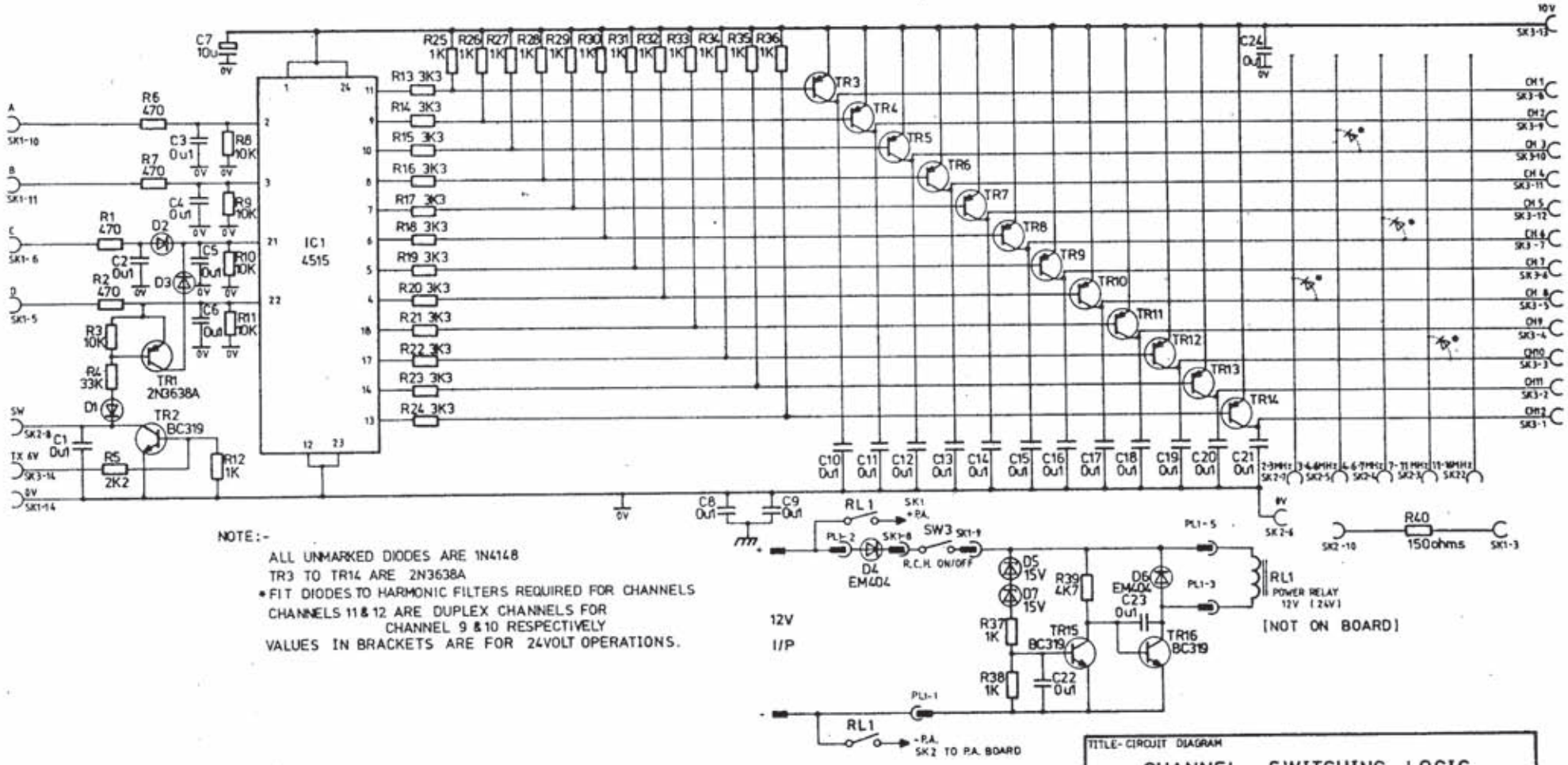

NOTE:-

ALL UNMARKED DIODES ARE 1N4148

TR3 TO TR14 ARE 2N3638A

* FIT DIODES TO HARMONIC FILTERS REQUIRED FOR CHANNELS

CHANNELS 11 & 12 ARE DUPLEX CHANNELS FOR CHANNEL 9 & 10 RESPECTIVELY

VALUES IN BRACKETS ARE FOR 24VOLT OPERATIONS.

TITLE- CIRCUIT DIAGRAM	CHANNEL SWITCHING LOGIC		
DRAWING No. 4·A·42·7·5		MODEL R.F.K. 105	
DESIGNED J.W.	DRAWN S.J.L.		CHECKED J.W.
SCALE	DATE 26/10/79		SHEET 1 OF 1
WORMALD COMMUNICATIONS		13 MUNFORD PLACE, BALCATTA, 6021 W.A.	

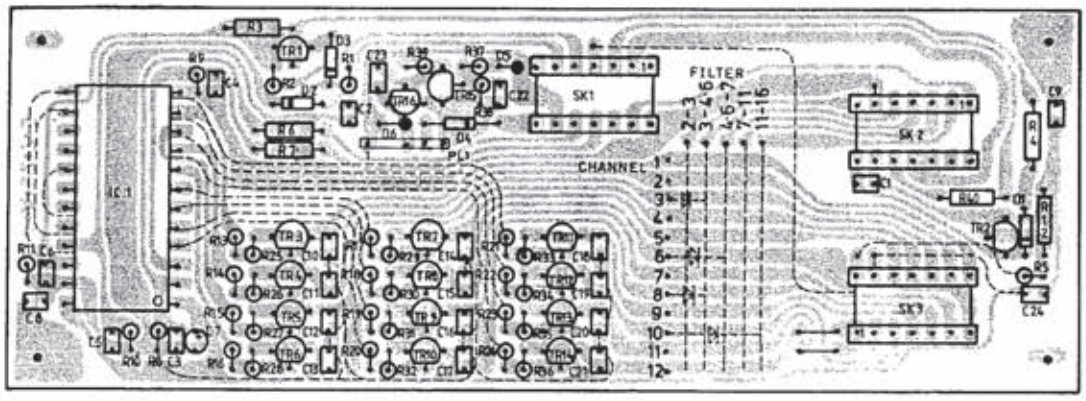

SK1

TO REMOTE HEAD CONNECTION	
PIN No.	CONNECTION
1	N.C
2	12V
3	12V SW
4	10V
5	D
6	C
7	
8	TO SW
9	FROM SW
10	A
11	B
12	N.C.
13	TX LIGHT
14	EARTH

SK2

TO SK1 POWER AMP.	
PIN No.	CONNECTION
1	TX LIGHT
2	11 to 16MHz
3	7 to 11MHz
4	4·6 to 7MHz
5	3 to 4·6MHz
6	EARTH
7	2 to 3MHz
8	SWITCH
9	EARTH
10	12V SW
11	12V
12	12V
13	N.C.
14	N.C.

SK3

TO SK2 FRONT END	
PIN No.	CONNECTION
1	CH 12
2	CH 11
3	CH 10
4	CH 9
5	CH 8
6	CH 7
7	CH 6
8	CH 1
9	CH 2
10	CH 3
11	CH 4
12	CH 5
13	10V
14	TX 6V

TITLE COMPONENT LAYOUT			
S.S.B. CHANNEL SWITCHING LOGIC			
DRAWING No. 4·A·12·7·4		MODEL R.F.K. 105	
DESIGNED J.W.	DRAWN S.J.L.	CHECKED P.L.	
SCALE	DATE 26/10/79	SHEET 1 OF 1	
PERTH COMMUNICATIONS			

CCT.REF	DESCRIPTION	STORE CODE	MFG	MFG CODE
A1.7	CCT. BOARD; CHANNEL SWITCHING	6006	WOCO	4.A.92.7.5
C1.7	CAP,FXD,CER; 100N,50V	1015		
C2.7	CAP,FXD,CER; 100N,50V	1015		
C3.7	CAP,FXD,CER; 100N,50V	1015		
C4.7	CAP,FXD,CER; 100N,50V	1015		
C5.7	CAP,FXD,CER; 100N,50V	1015		
C6.7	CAP,FXD,CER; 100N,50V	1015		
C7.7	CAP,FXD,TANT; 10UF,16V	1651		
C8.7	CAP,FXD,CER; 100N,50V	1015		
C9.7	CAP,FXD,CER; 100N,50V	1015		
C10.7	CAP,FXD,CER; 100N,50V	1015		
C11.7	CAP,FXD,CER; 100N,50V	1015		
C12.7	CAP,FXD,CER; 100N,50V	1015		
C13.7	CAP,FXD,CER; 100N,50V	1015		
C14.7	CAP,FXD,CER; 100N,50V	1015		
C15.7	CAP,FXD,CER; 100N,50V	1015		
C16.7	CAP,FXD,CER; 100N,50V	1015		
C17.7	CAP,FXD,CER; 100N,50V	1015		
C18.7	CAP,FXD,CER; 100N,50V	1015		
C19.7	CAP,FXD,CER; 100N,50V	1015		
C20.7	CAP,FXD,CER; 100N,50V	1015		
C21.7	CAP,FXD,CER; 100N,50V	1015		
C22.7	CAP,FXD,CER; 100N,50V	1015		
C23.7	CAP,FXD,CER; 100N,50V	1015		
C24.7	CAP,FXD,CER; 100N,50V	1015		
D1.7	DIODE; G.P. SMALL SIGNAL	3302	FAIR	1N4148
D2.7	DIODE; G.P. SMALL SIGNAL	3302	FAIR	1N4148
D3.7	DIODE; G.P. SMALL SIGNAL	3302	FAIR	1N4148
D4.7	DIODE; POWER 1AMP	3303	FAIR	1N4004
D5.7	DIODE; ZENER 15V 250mW	3324	PHIL	BZX79/C15
D6.7	DIODE; POWER 1AMP	3303	FAIR	1N4004
IC1.7	INT. CCT; CMOS 4-16 DECODER	2392	PHIL	HEF4515B
PL1.7	PLUG; 5 PIN	4001	MOL	4030A/3
R1.7	RES,FXD,CBN; 470,.25W,5%	0245	PHIL	CR25
R2.7	RES,FXD,CBN; 470,.25W,5%	0245	PHIL	CR25
R3.7	RES,FXD,CBN; 10K,.25W,5%	0261	PHIL	CR25
R4.7	RES,FXD,CBN; 33K,.25W,5%	0267	PHIL	CR25
R5.7	RES,FXD,CBN; 2K2,.25W,5%	0253	PHIL	CR25
R6.7	RES,FXD,CBN; 470,.25W,5%	0245	PHIL	CR25
R7.7	RES,FXD,CBN; 470,.25W,5%	0245	PHIL	CR25
R8.7	RES,FXD,CBN; 10K,.25W,5%	0261	PHIL	CR25
R9.7	RES,FXD,CBN; 10K,.25W,5%	0261	PHIL	CR25
R10.7	RES,FXD,CBN; 10K,.25W,5%	0261	PHIL	CR25
R11.7	RES,FXD,CBN; 10K,.25W,5%	0261	PHIL	CR25
R12.7	RES,FXD,CBN; 1K,.25W,5%	0249	PHIL	CR25
R13.7	RES,FXD,CBN; 3K3,.25W,5%	0255	PHIL	CR25
R14.7	RES,FXD,CBN; 3K3,.25W,5%	0255	PHIL	CR25
R15.7	RES,FXD,CBN; 3K3,.25W,5%	0255	PHIL	CR25
R16.7	RES,FXD,CBN; 3K3,.25W,5%	0255	PHIL	CR25
R17.7	RES,FXD,CBN; 3K3,.25W,5%	0255	PHIL	CR25

REV	ECN	BY	DATE

TITLE
PARTS LISTING - 4.A.23.7.3
CHANNEL SWITCHING - RFK105

DRAWING No		MODEL
DESIGNED	DRAWN	CHECKED
SCALE	DATE 15.4.80	SHEET 1 OF 2

R.F.SYSTEMS 66 GUTHRIE ST., OSBORNE PARK, PERTH W.A. 6017

CCT.REF	DESCRIPTION	STORE CODE	MFG	MFG CODE
R18.7	RES,FXD,CBN; 3K3,.25W,5%	0255	PHIL	CR25
R19.7	RES,FXD,CBN; 3K3,.25W,5%	0255	PHIL	CR25
R20.7	RES,FXD,CBN; 3K3,.25W,5%	0255	PHIL	CR25
R21.7	RES,FXD,CBN; 3K3,.25W,5%	0255	PHIL	CR25
R22.7	RES,FXD,CBN; 3K3,.25W,5%	0255	PHIL	CR25
R23.7	RES,FXD,CBN; 3K3,.25W,5%	0255	PHIL	CR25
R24.7	RES,FXD,CBN; 3K3,.25W,5%	0255	PHIL	CR25
R25.7	RES,FXD,CBN; 1K,.25W,5%	0249	PHIL	CR25
R26.7	RES,FXD,CBN; 1K,.25W,5%	0249	PHIL	CR25
R27.7	RES,FXD,CBN; 1K,.25W,5%	0249	PHIL	CR25
R28.7	RES,FXD,CBN; 1K,.25W,5%	0249	PHIL	CR25
R29.7	RES,FXD,CBN; 1K,.25W,5%	0249	PHIL	CR25
R30.7	RES,FXD,CBN; 1K,.25W,5%	0249	PHIL	CR25
R31.7	RES,FXD,CBN; 1K,.25W,5%	0249	PHIL	CR25
R32.7	RES,FXD,CBN; 1K,.25W,5%	0249	PHIL	CR25
R33.7	RES,FXD,CBN; 1K,.25W,5%	0249	PHIL	CR25
R34.7	RES,FXD,CBN; 1K,.25W,5%	0249	PHIL	CR25
R35.7	RES,FXD,CBN; 1K,.25W,5%	0249	PHIL	CR25
R36.7	RES,FXD,CBN; 1K,.25W,5%	0249	PHIL	CR25
R37.7	RES,FXD,CBN; 1K,.25W,5%	0249	PHIL	CR25
R38.7	RES,FXD,CBN; 1K,.25W,5%	0249	PHIL	CR25
R39.7	RES,FXD,CBN; 4K7,.25W,5%	0257	PHIL	CR25
R40.7	RES,FXD,CBN; 150,.25W,5%	0239	PHIL	CR25
SK1.7	SOCKET; 14 PIN DIL	4451	AMPH	FRC-D14
SK2.7	SOCKET; 14 PIN DIL	4451	AMPH	FRC-D14
SK3.7	SOCKET; 14 PIN DIL	4451	AMPH	FRC-D14
TR1.7	TRANSISTOR; PNP,40V,500mA,500mW	2211	NSC	2N3638A
TR2.7	TRANSISTOR; NPN,30V,200mA,500mW	2201	NSC	BC319
TR3.7	TRANSISTOR; PNP,40V,500mA,500mW	2211	NSC	2N3638A
TR4.7	TRANSISTOR; PNP,40V,500mA,500mW	2211	NSC	2N3638A
TR5.7	TRANSISTOR; PNP,40V,500mA,500mW	2211	NSC	2N3638A
TR6.7	TRANSISTOR; PNP,40V,500mA,500mW	2211	NSC	2N3638A
TR7.7	TRANSISTOR; PNP,40V,500mA,500mW	2211	NSC	2N3638A
TR8.7	TRANSISTOR; PNP,40V,500mA,500mW	2211	NSC	2N3638A
TR9.7	TRANSISTOR; PNP,40V,500mA,500mW	2211	NSC	2N3638A
TR10.7	TRANSISTOR; PNP,40V,500mA,500mW	2211	NSC	2N3638A
TR11.7	TRANSISTOR; PNP,40V,500mA,500mW	2211	NSC	2N3638A
TR12.7	TRANSISTOR; PNP,40V,500mA,500mW	2211	NSC	2N3638A
TR13.7	TRANSISTOR; PNP,40V,500mA,500mW	2211	NSC	2N3638A
TR14.7	TRANSISTOR; PNP,40V,500mA,500mW	2211	NSC	2N3638A
TR15.7	TRANSISTOR; NPN,30V,200mA,500mW	2201	NSC	BC319
TR16.7	TRANSISTOR; NPN,30V,200mA,500mW	2201	NSC	BC319

REV	ECN	BY	DATE

TITLE
PARTS LISTING - 4.A.23.7.3
CHANNEL SWITCHING - RFK105

DRAWING No.	MODEL	
DESIGNED	DRAWN	CHECKED
SCALE	DATE	SHEET OF

R.F.SYSTEMS 66 GUTHRIE ST. OSBORNE PARK, PERTH W.A. 6017

SECTION 8 2

CIRCUIT DIAGRAMS

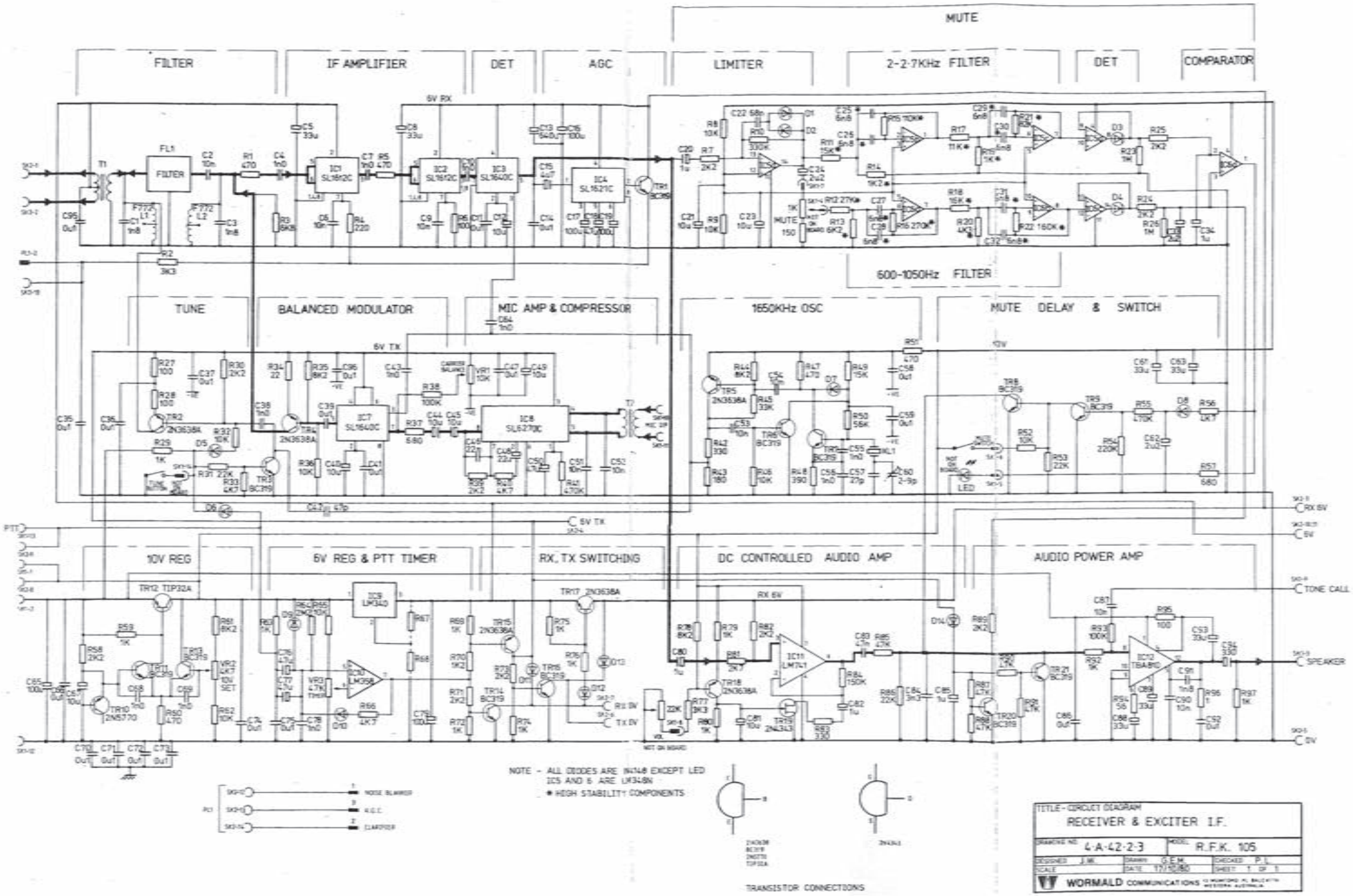
MUTE
FILTER
IF AMPLIFIER
DET
AGC
LIMITER
2-2·7KHz FILTER
DET
COMPARATOR
600-1050Hz FILTER
TUNE
BALANCED MODULATOR
MIC AMP & COMPRESSOR
1650KHz OSC
MUTE DELAY & SWITCH
10V REG
6V REG & PTT TIMER
RX, TX SWITCHING
DC CONTROLLED AUDIO AMP
AUDIO POWER AMP
6V RX
6V TX
RX 6V
PTT
TONE CALL
SPEAKER
NOTE - ALL DIODES ARE IN148 EXCEPT LED
ICS AND 6 ARE LM348N
* HIGH STABILITY COMPONENTS
TRANSISTOR CONNECTIONS
TITLE - CIRCUIT DIAGRAM
RECEIVER & EXCITER I.F.
DRAWING NO. 4·A·42·2·3
MODEL R.F.K. 105
DESIGNED J.W.
DRAWN G.E.M.
CHECKED P.L.
SCALE
DATE 17/10/80
SHEET 1 OF 1
WORMALD COMMUNICATIONS

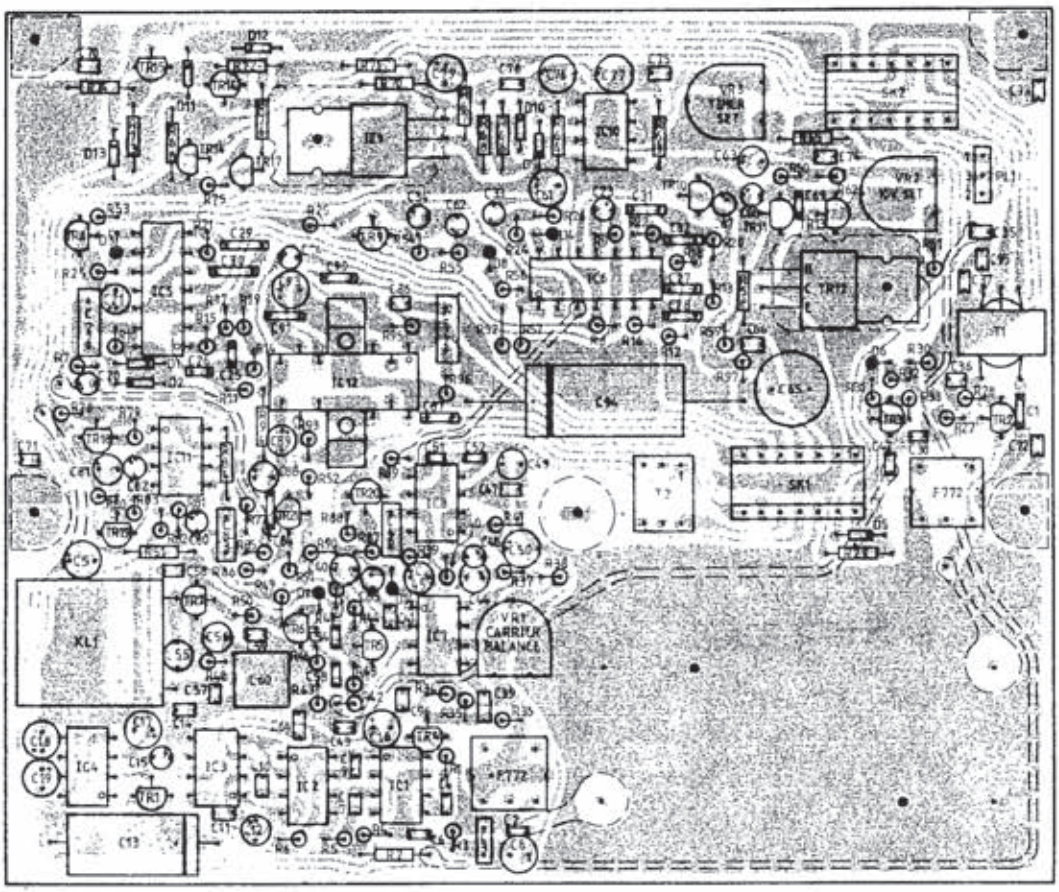

SK1

TO SK3 REMOTE HEAD CONNECTOR	
PIN No	CONNECTION
1	10V INPUT
2	10 VOLTS
3	SPEAKER
4	MUTE CONTROL CENTRE
5	L.E.D.
6	MUTE SWITCH
7	MUTE CONTROL TOP
8	VOLUME CONTROL
9	TONE CALL
10	MIC INPUT
11	MIC INPUT
12	-VE
13	P.T.T.
14	TUNE BUTTON

SK2

TO SK1 FRONT END CONNECTOR	
PIN No	CONNECTION
1	I.F. INPUT
2	I.F. INPUT
3	R.X. SWITCHED 6 VOLTS
4	T.X. SWITCHED 6 VOLTS
5	-VE
6	T.X. SWITCHED ZERO VOLTS
7	R.X. SWITCHED ZERO VOLTS
8	10 VOLTS REG.
9	P.T.T.
10	6 VOLTS
11	6 VOLTS
12	NOISE BLANKER
13	A.G.C.
14	CLARIFIER

REV	ECN	BY	DATE

TITLE - COMPONENT LAYOUT

RECEIVER & EXCITER I.F.

DRAWING No. 4·A·12·2·8·		MODEL R.F.K.105	
DESIGNED JW	DRAWN G.E.M.		CHECKED P.L.
SCALE	DATE 24/10/80		SHEET 1 OF 1

WORMALD COMMUNICATIONS 98 Guthrie Street, Osborne Park, 6017, W.A.

(i)

CCT.REF	DESCRIPTION	STORES CODE	MFG	MFG CODE
A1.2	CCT.BOARD; RCVR & ECX I.F.	6004	WOCO	4.A.92.2.12
C1.2	CAP,FXD,POLY; 1N8,100V	1530		
C2.2	CAP,FXD,CER; 10N,63V	1304	PHIL	629 SERIES
C3.2	CAP,FXD,POLY; 1N8,100V	1530		
C4.2	CAP,FXD,CER; 1N0,63V	1301	PHIL	629 SERIES
C5.2	CAP,FXD,TANT; 33uF,16V	1654		
C6.2	CAP,FXD,CER; 10N,63V	1304	PHIL	629 SERIES
C7.2	CAP,FXD,CER; 1N0,63V	1301	PHIL	629 SERIES
C8.2	CAP,FXD,TANT; 33uF,16V	1654		
C9.2	CAP,FXD,CER; 10N,63V	1304	PHIL	629 SERIES
C10.2	CAP,FXD,CER; 1N0,.63V	1301	PHIL	629 SERIES
C11.2	CAP,FXD,CER; 100N,.50V	1015		
C12.2	CAP,FXD,TANT; 10uF,16V	1651		
C13.2	CAP,FXD,ELECTRO; 640uF,16V	1756		
C14.2	CAP,FXD,CER; 100N,50V	1015		
C15.2	CAP,FXD,TANT; 4u7,16V	1649		
C16.2	CAP,FXD,TANT; 100uF,6V	1636		
C17.2	CAP,FXD,TANT; 100uF,6V	1636		
C18.2	CAP,FXD,TANT; 47uF,10V	1635		
C19.2	CAP,FXD,TANT; 100uF,6V	1636		
C20.2	CAP,FXD,TANT; 1uF,35V	1685		
C21.2	CAP,FXD,TANT; 10uF,16V	1651		
C22.2	CAP,FXD,POLY; 68N,100V	1517		
C23.2	CAP,FXD,TANT; 10uF,16V	1651		
C24.2	CAP,FXD,TANT; 2u2,16V	1687		
C25.2	CAP,FXD,STYR; 6N8,63V	0755	PHIL	MICROPOCO
C26.2	CAP,FXD,STYR; 6N8,63V	0755	PHIL	MICROPOCO
C27.2	CAP,FXD,STYR; 6N8,63V	0755	PHIL	MICROPOCO
C28.2	CAP,FXD,STYR; 6N8,63V	0755	PHIL	MICROPOCO
C29.2	CAP,FXD,STYR; 6N8,63V	0755	PHIL	MICROPOCO
C30.2	CAP,FXD,STYR; 6N8,63V	0755	PHIL	MICROPOCO
C31.2	CAP,FXD,STYR; 6N8,63V	0755	PHIL	MICROPOCO
C32.2	CAP,FXD,STYR; 6N8,63V	0755	PHIL	MICROPOCO
C33.2	CAP,FXD,TANT; 2u2,16V	1687		
C34.2	CAP,FXD,TANT; 1uF,35V	1685		
C35.2	CAP,FXD,CER; 100n,50V	1015		
C36.2	CAP,FXD,CER; 100n,50V	1015		
C37.2	CAP,FXD,CER; 100n,50V	1015		
C38.2	CAP,FXD,CER; 1N0,63V	1301	PHIL	629 SERIES
C39.2	CAP,FXD,CER; 100N,50V	1015		
C40.2	CAP,FXD,TANT; 10uF,16V	1651		
C41.2	CAP,FXD,CER; 100N,50V	1015		
C42.2	CAP,FXD,CER; 47pF,NPO, 63V	1418	PHIL	632 SERIES
C43.2	CAP,FXD,CER; 1N0,63V	1301	PHIL	629 SERIES
C44.2	CAP,FXD,TANT; 10uF,16V	1651		
C45.2	CAP,FXD,TANT; 10uF,16V	1651		
C46.2	CAP,FXD,POLY; 22N,100V	1512		
C47.2	CAP,FXD,CER; 100N,50V	1015		
C48.2	CAP,FXD,TANT; 22u,16V	1683		
C49.2	CAP,FXD,TANT; 10uF,16V	1651		
C50.2	CAP,FXD,TANT; 47uF,10V	1635		
C51.2	CAP,FXD,CER; 10N,63V	1304	PHIL	629 SERIES
C52.2	CAP,FXD,CER; 10N,63V	1304	PHIL	629 SERIES
C53.2	CAP,FXD,CER; 10N,63V	1304	PHIL	629 SERIES
C54.2	CAP,FXD,CER; 10N,63V	1304	PHIL	629 SERIES

TITLE PARTS LISTING - 4.A.23.2.8
RCVR & EXC I.F. S.S.B.

DRAWING No | MODEL
DESIGNED | DRAWN | CHECKED
SCALE | DATE | SHEET OF

WORMALD COMMUNICATIONS

REV	ECN	BY	DATE

CCT.REF	DESCRIPTION	STORES CODE	MFG	MFG CODE
C55.2	CAP,FXD,CER; 1N0,63V	1301	PHIL	629 SERIES
C56.2	CAP,FXD,CER; 1N0,63V	1301	PHIL	629 SERIES
C57.2	CAP,FXD,CER; 27pF,63V	1415	PHIL	630 SERIES
C58.2	CAP,FXD,CER; 100N,50V	1015		
C59.2	CAP,FXD,CER; 100N,50V	1015		
C60.2	CAP,VARIABLE; 2-9pF	2012	PHIL	809 SERIES
C61.2	CAP,FXD,TANT; 33uF,16V	1654		
C62.2	CAP,FXD,TANT; 2u2,16V	1687		
C63.2	CAP,FXD,TANT; 33uF,16V	1654		
C64.2	CAP,FXD,CER; 1N0,63V	1304	PHIL	629 SERIES
C65.2	CAP,FXD,ELECTRO; 100uF,16V	1752		
C66.2	CAP,FXD,CER; 100N,50V	1015		
C67.2	CAP,FXD,TANT; 10uF,16V	1651		
C68.2	CAP,FXD,CER; 1N0,63V	1301	PHIL	629 SERIES
C69.2	CAP,FXD,CER; 1N0,63V	1301	PHIL	629 SERIES
C70.2	CAP,FXD,CER; 100N,50V	1015		
C71.2	CAP,FXD,CER; 100N,50V	1015		
C72.2	CAP,FXD,CER; 100N,50V	1015		
C73.2	CAP,FXD,CER; 100N,50V	1015		
C74.2	CAP,FXD,CER; 100N,50V	1015		
C75.2	CAP,FXD,CER; 100N,50V	1015		
C76.2	CAP,FXD,TANT; 47uF,10V	1635		
C77.2	CAP,FXD,TANT; 47uF,10V	1635		
C78.2	CAP,FXD,CER; 1N0,63V	1301	PHIL	629 SERIES
C79.2	CAP,FXD,ELECTRO; 100uF,16V	1752		
C80.2	CAP,FXD,TANT; 1uF,35V	1685		
C81.2	CAP,FXD,TANT; 10uF,16V	1651		
C82.2	CAP,FXD,TANT; 1uF,35V	1685		
C83.2	CAP,FXD,POLY; 47N,100V	1515		
C84.2	CAP,FXD,POLY; 3N3,100V	1504		
C85.2	CAP,FXD,TANT; 1uF,35V	1685		
C86.2	CAP,FXD,CER; 100N,50V	1015		
C87.2	CAP,FXD,CER; 10N,100V	1510		
C88.2	CAP,FXD,TANT; 33uF,16V	1654		
C89.2	CAP,FXD,TANT; 33uF,16V	1654		
C90.2	CAP,FXD,CER; 10N,100V	1510		
C91.2	CAP,FXD,POLY; 1N8,100V	1530		
C92.2	CAP,FXD,CER; 100N,50V	1015		
C93.2	CAP,FXD,TANT; 33uF,16V	1654		
C94.2	CAP,FXD,ELECTRO; 330uF,16V	1754		
C95.2	CAP,FXD,CER; 100N,50V	1015		
C96.2	CAP,FXD,CER; 100N,50V	1015		
D1.2	DIODE; G.P. SMALL SIGNAL	3302	FAIR	1N4148
D2.2	DIODE; G.P. SMALL SIGNAL	3302	FAIR	1N4148
D3.2	DIODE; G.P. SMALL SIGNAL	3302	FAIR	1N4148
D4.2	DIODE; G.P. SMALL SIGNAL	3302	FAIR	1N4148
D5.2	DIODE; G.P. SMALL SIGNAL	3302	FAIR	1N4148
D6.2	DIODE; G.P. SMALL SIGNAL	3302	FAIR	1N4148
D7.2	DIODE; G.P. SMALL SIGNAL	3302	FAIR	1N4148
D8.2	DIODE; G.P. SMALL SIGNAL	3302	FAIR	1N4148
D9.2	DIODE; G.P. SMALL SIGNAL	3302	FAIR	1N4148
D10.2	DIODE; G.P. SMALL SIGNAL	3302	FAIR	1N4148
D11.2	DIODE; G.P. SMALL SIGNAL	3302	FAIR	1N4148
D12.2	DIODE; G.P. SMALL SIGNAL	3302	FAIR	1N4148
D13.2	DIODE; G.P. SMALL SIGNAL	3302	FAIR	1N4148

TITLE PARTS LISTING - 4.A.23.2.8
RCVR & EXC I.F. S.S.B.

DRAWING No | MODEL

DESIGNED | DRAWN | CHECKED
SCALE | DATE | SHEET OF

WORMALD COMMUNICATIONS

REV	ECN	BY	DATE

CCT.REF	DESCRIPTION	STORES CODE	MFG	MFG CODE
D14.2	DIODE; G.P. SMALL SIGNAL	3302	FAIR	1N4148
FL1.2	CRYSTAL FILTER; 1650 KHz LSB	7610	HY-Q	QF01602
IC1.2	INT. CCT; R.F. AMP.	2385	PLES	SL1612C
IC2.2	INT. CCT; R.F. AMP.	2385	PLES	SL1612C
IC3.2	INT. CCT; BAL.MIXER	2384	PLES	SL1640C
IC4.2	INT. CCT; A.G.C. GEN	2386	PLES	SL1621C
IC5.2	INT. CCT; QUAD OP.AMP.	2389	NSC	LM348N
IC6.2	INT. CCT; QUAD OP.AMP.	2389	NSC	LM348N
IC7.2	INT. CCT; BAL. MIXER	2384	PLES	SL1640C
IC8.2	INT. CCT; MIKE COMP.	2387	PLES	SL1626C
IC9.2	INT. CCT; 6V REG	2256	NSC	LM340T/6
IC10.2	INT. CCT; DUAL OP.AMP	2350	NSC	LM358N
IC11.2	INT. CCT; OP.AMP	2338	NSC	LM741
IC12.2	INT. CCT; AUDIO AMP	2340	SGS	TBA810AS
PL1.2	PLUG; 3 PIN	4001	MOLEX	4030A/3
R1.2	RES,FXD,CBN; 470,.25W,5%	0245	PHIL	CR25
R2.2	RES,FXD,CBN; 3K3,.25W,5%	0255	PHIL	CR25
R3.2	RES,FXD,CBN; 6K8,.25W,5%	0259	PHIL	CR25
R4.2	RES,FXD,CBN; 220,.25W,5%	0241	PHIL	CR25
R5.2	RES,FXD,CBN; 470,.25W,5%	0245	PHIL	CR25
R6.2	RES,FXD,CBN; 100,.25W,5%	0237	PHIL	CR25
R7.2	RES,FXD,CBN; 2K2,.25W,5%	0253	PHIL	CR25
R8.2	RES,FXD,CBN; 10K,.25W,5%	0261	PHIL	CR25
R9.2	RES,FXD,CBN; 10K,.25W,5%	0261	PHIL	CR25
R10.2	RES,FXD,CBN; 330K,.25W,5%	0279	PHIL	CR25
R11.2	RES,FXD,METAL FILM: 15K,.25W,2%	1187	PHIL	MR25
R12.2	RES,FXD,METAL FILM; 27K,.25W,2%	1193	PHIL	MR25
R13.2	RES,FXD,METAL FILM; 6K2,.25W,2%	1178	PHIL	MR25
R14.2	RES,FXD,METAL FILM; 1K2,.25W,2%	1166	PHIL	MR25
R15.2	RES,FXD,METAL FILM; 110K,.25W,2%	1208	PHIL	MR25
R16.2	RES,FXD,METAL FILM; 270K,.25W,2%	1223	PHIL	MR25
R17.2	RES,FXD,METAL FILM; 11K,.25W,2%	1184	PHIL	MR25
R18.2	RES,FXD,METAL FILM; 16K,.25W,2%	1188	PHIL	MR25
R19.2	RES,FXD,METAL FILM; 1K,.25W,2%	1163	PHIL	MR25
R20.2	RES,FXD,METAL FILM; 4K3,.25W,2%	1174	PHIL	MR25
R21.2	RES,FXD,METAL FILM; 82K,.25W,2%	1205	PHIL	MR25
R22.2	RES,FXD,METAL FILM, 160K,.25W,2%	1216	PHIL	MR25
R23.2	RES,FXD,CBN; 1M,.25W,5%	0285	PHIL	CR25
R24.2	RES,FXD,CBN; 2K2,.25W,5%	0253	PHIL	CR25
R25.2	RES,FXD,CBN; 2K2,.25W,5%	0253	PHIL	CR25
R26.2	RES,FXD,CBN; 1M,.25W,5%	0285	PHIL	CR25
R27.2	RES,FXD,CBN; 100,.25W,5%	0237	PHIL	CR25
R28.2	RES,FXD,CBN; 100,.25W,5%	0237	PHIL	CR25
R29.2	RES,FXD,CBN; 1K,.25W,5%	0249	PHIL	CR25
R30.2	RES,FXD,CBN; 2K2,.25W,5%	0253	PHIL	CR25
R31.2	RES,FXD,CBN; 22K,.25W,5%	0265	PHIL	CR25
R32.2	RES,FXD,CBN; 10K,.25W,5%	0261	PHIL	CR25
R33.2	RES,FXD,CBN; 4K7,.25W,5%	0257	PHIL	CR25
R34.3	RES,FXD,CBN; 22,.25W,5%	0229	PHIL	CR25
R35.2	RES,FXD,CBN; 8K2,.25W,5%	0260	PHIL	CR25
R36.2	RES,FXD,CBN; 10K,.25W,5%	0261	PHIL	CR25

TITLE PARTS LISTING - 4.A.23.2.8
RCVR & EXC I.F. S.S.B.

DRAWING No. | MODEL
DESIGNED | DRAWN | CHECKED
SCALE | DATE | SHEET OF

WORMALD COMMUNICATIONS

REV	ECN	BY	DATE

CCT.REF	DESCRIPTION	STORES CODE	MFG	MFG CODE
R37.2	RES,FXD,CBN; 680,.25W,5%	0247	PHIL	CR25
R38.2	RES,FXD,CBN; 100K,.25W,5%	0273	PHIL	CR25
R39.2	RES,FXD,CBN; 2K2,.25W,5%	0253	PHIL	CR25
R40.2	RES,FXD,CBN; 4K7,.25W,5%	0257	PHIL	CR25
R41.2	RES,FXD,CBN; 470K,.25W,5%	0281	PHIL	CR25
R42.2	RES,FXD,CBN; 330,.25W,5%	0243	PHIL	CR25
R43.2	RES,FXD,CBN; 180,.25W,5%	0240	PHIL	CR25
R44.2	RES,FXD,CBN; 8K2,.25W,5%	0260	PHIL	CR25
R45.2	RES,FXD,CBN; 33K,.25W,5%	0267	PHIL	CR25
R46.2	RES,FXD,CBN; 10K,.25W,5%	0261	PHIL	CR25
R47.2	RES,FXD,CBN; 470,.25W,5%	0245	PHIL	CR25
R48.2	RES,FXD,CBN; 390,.25W,5%	0244	PHIL	CR25
R49.2	RES,FXD,CBN; 15K,.25W,5%	0263	PHIL	CR25
R50.2	RES,FXD,CBN; 56K,.25W,5%	0270	PHIL	CR25
R51.2	RES,FXD,CBN; 470,.25W,5%	0245	PHIL	CR25
R52.2	RES,FXD,CBN; 10K,.25W,5%	0261	PHIL	CR25
R53.2	RES,FXD,CBN; 22K,.25W,5%	0265	PHIL	CR25
R54.2	RES,FXD,CBN; 220K,.25W,5%	0277	PHIL	CR25
R55.2	RES,FXD,CBN; 470K,.25W,5%	0281	PHIL	CR25
R56.2	RES,FXD,CBN; 47K,.25W,5%	0257	PHIL	CR25
R57.2	RES,FXD,CBN; 680,.25W,5%	0247	PHIL	CR25
R58.2	RES,FXD,CBN; 2K2,.25W,5%	0253	PHIL	CR25
R59.2	RES,FXD,CBN; 1K,.25W,5%	0249	PHIL	CR25
R60.2	RES,FXD,CBN; 470,.25W,5%	0245	PHIL	CR25
R61.2	RES,FXD,CBN; 8K2,.25W,5%	0260	PHIL	CR25
R62.2	RES,FXD,CBN; 10K,.25W,5%	0261	PHIL	CR25
R63.2	RES,FXD,CBN; 1K,.25W,5%	0249	PHIL	CR25
R64.2	RES,FXD,CBN; 2M2,.25W,5%	0289	PHIL	CR25
R65.2	RES,FXD,CBN; 10K,.25W,5%	0261	PHIL	CR25
R66.2	RES,FXD,CBN; 4K7,.25W,5%	0257	PHIL	CR25
R67.2	DELETED			
R68.2	DELETED			
R69.2	RES,FXD,CBN; 1K,.25W,5%	0249	PHIL	CR25
R70.2	RES,FXD,CBN; 1K2,.25W,5%	0250	PHIL	CR25
R71.2	RES,FXD,CBN; 2K2,.25W,5%	0253	PHIL	CR25
R72.2	RES,FXD,CBN; 1K,.25W,5%	0249	PHIL	CR25
R73.2	RES,FXD,CBN; 2K2,.25W,5%	0253	PHIL	CR25
R74.2	RES,FXD,CBN; 1K,.25W,5%	0249	PHIL	CR25
R75.2	RES,FXD,CBN; 1K,.25W,5%	0249	PHIL	CR25
R76.2	RES,FXD,CBN; 1K,.25W,5%	0249	PHIL	CR25
R77.2	RES,FXD,CBN; 3K3,.25W,5%	0255	PHIL	CR25
R78.2	RES,FXD,CBN; 8K2,.25W,5%	0260	PHIL	CR25
R79.2	RES,FXD,CBN; 1K,.25W,5%	0249	PHIL	CR25
R80.2	RES,FXD,CBN; 1K,.25W,5%	0249	PHIL	CR25
R81.2	RES,FXD,CBN; 2K7,.25W,5%	0254	PHIL	CR25
R82.2	RES,FXD,CBN; 2K2,.25W,5%	0253	PHIL	CR25
R83.2	RES,FXD,CBN; 330,.25W,5%	0243	PHIL	CR25
R84.2	RES,FXD,CBN; 150K,.25W, 5%	0275	PHIL	CR25
R85.2	RES,FXD,CBN; 47K,.25W,5%	0269	PHIL	CR25
R86.2	RES,FXD,CBN; 22K,.25W,5%	0265	PHIL	CR25
R87.2	RES,FXD,CBN; 47K,.25W,5%	0269	PHIL	CR25
R88.2	RES,FXD,CBN; 47K,.25W,5%	0269	PHIL	CR25
R89.2	RES,FXD,CBN; 2K2,.25W,5%	0253	PHIL	CR25
R90.2	RES,FXD,CBN; 47K,.25W,5%	0269	PHIL	CR25
R91.2	RES,FXD,CBN; 47K,.25W,5%	0269	PHIL	CR25
R92.2	RES,FXD,CBN; 1K,.25W,5%	0249	PHIL	CR25

TITLE PARTS LISTING - 4.A.23.2.8
RCVR & EXC I.F. S.S.B.

DRAWING No | MODEL

DESIGNED | DRAWN | CHECKED
SCALE | DATE | SHEET OF

WORMALD COMMUNICATIONS

REV	ECN	BY	DATE

CCT.REF	DESCRIPTION	STORES CODE	MFG	MFG CODE
R93.2	RES,FXD,CBN; 100K,.25W,5%	0273	PHIL	CR25
R94.2	RES,FXD,CBN; 56,.25W,5%	0234	PHIL	CR25
R95.2	RES,FXD,CBN; 100,.25W,5%	0237	PHIL	CR25
R96.2	RES,FXD,CBN; 1,.25W,5%	0213	PHIL	CR25
R97.2	RES,FXD,CBN; 1K,.25W,5%	0249	PHIL	CR25
SK1.2	SOCKET; 14 PIN DIL	4451		
SK2.2	SOCKET; 14 PIN DIL	4451		
TR1.2	TRANSISTOR; NPN,30V,200mA,500mW	2201	NSC	BC319
TR2.2	TRANSISTOR; PNP,40V,500mA,500mW	2211	NSC	2N3638A
TR3.2	TRANSISTOR; NPN,30V,200mA,500mW	2201	NSC	BC319
TR4.2	TRANSISTOR; PNP,40V,500mA,500mW	2211	NSC	2N3638A
TR5.2	TRANSISTOR; PNP,40V,500mA,500mW	2211	NSC	2N3638A
TR6.2	TRANSISTOR; NPN,30V,200mA,500mW	2201	NSC	BC319
TR7.2	TRANSISTOR; NPN,30V,200mA,500mW	2201	NSC	BC319
TR8.2	TRANSISTOR; NPN,30V,200mA,500mW	2201	NSC	BC319
TR9.2	TRANSISTOR; NPN,30V,200mA,500mW	2201	NSC	BC319
TR10.2	TRANSISTOR; NPN,45V,30mA,250mW	2209	FAIR	2N5770
TR11.2	TRANSISTOR; NPN,30V,200mA,500mW	2201	NSC	BC319
TR12.2	TRANSISTOR; PNP,60V,3A,40W	2250	FAIR	TIP32A
TR13.2	TRANSISTOR; NPN,30V,200mA,500mW	2201	NSC	BC319
TR14.2	TRANSISTOR; NPN,30V,200mA,500mW	2201	NSC	BC319
TR15.2	TRANSISTOR; PNP,40V,500mA,500mW	2211	NSC	2N3638A
TR16.2	TRANSISTOR; NPN,30V,200mA,500mW	2201	NSC	BC319
TR17.2	TRANSISTOR; PNP,40V,500mA,500mW	2211	NSC	2N3638A
TR18.2	TRANSISTOR; PNP,40V,500mA,500mW	2211	NSC	2N3638A
TR19.2	F.E.T.P. CHANNEL; 25V, IDSS,20mA	2236	NSC	2N4343
TR20.2	TRANSISTOR; NPN,30V,200mA,500mW	2201	NSC	BC319
TR21.2	TRANSISTOR; NPN,30V,200mA,500mW	2201	NSC	BC319
VR1.2	RES,VARIABLE; 10K,.25W,10%	2535	PIHR	
VR2.2	RES,VARIABLE; 4K7,.25W,10%	2532	PIHR	
VR3.2	RES,VARIABLE; 47K,.25W,10%	2545	PIHR	
XL1.2	CRYSTAL; CASE HC6/W,SPEC P05F	7640	HY-Q	1650 KHz.

TITLE PARTS LISTING - 4.A.23.2.8
RCVR & EXC I.F. S.S.B.

DRAWING No | MODEL

DESIGNED | DRAWN | CHECKED
SCALE | DATE | SHEET OF

WORMALD COMMUNICATIONS 98 Guthrie Street Osborne Park 6017 W.A.

REV	ECN	BY	DATE

SECTION 8.3

CIRCUIT DIAGRAM

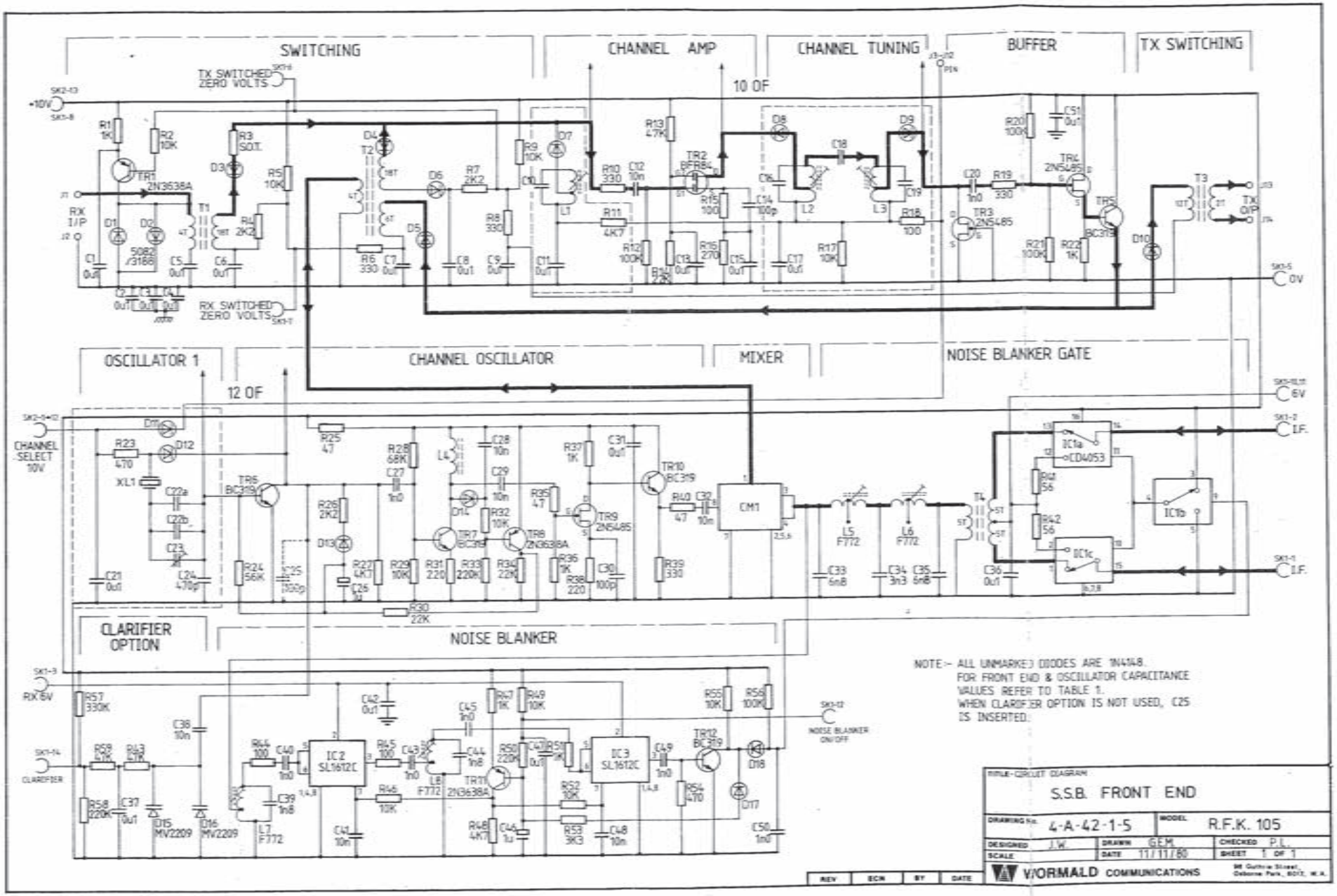
SWITCHING
CHANNEL AMP
CHANNEL TUNING
BUFFER
TX SWITCHING
10 OF
TX SWITCHED ZERO VOLTS
RX SWITCHED ZERO VOLTS
+10V
RX I/P
TX O/P
0V
OSCILLATOR 1
CHANNEL OSCILLATOR
MIXER
NOISE BLANKER GATE
12 OF
CHANNEL SELECT 10V
6V
I.F.
CLARIFIER OPTION
NOISE BLANKER
RX 6V
CLARIFIER
NOISE BLANKER ON/OFF
NOTE:- ALL UNMARKED DIODES ARE 1N4148.
FOR FRONT END & OSCILLATOR CAPACITANCE VALUES REFER TO TABLE 1.
WHEN CLARIFIER OPTION IS NOT USED, C25 IS INSERTED.
SINGLE-CIRCUIT DIAGRAM
S.S.B. FRONT END
DRAWING No. 4-A-42-1-5
MODEL R.F.K. 105
DESIGNED J.W.
DRAWN G.E.M.
CHECKED P.L.
SCALE
DATE 11/11/80
SHEET 1 OF 1
WORMALD COMMUNICATIONS
REV
ECN
BY
DATE

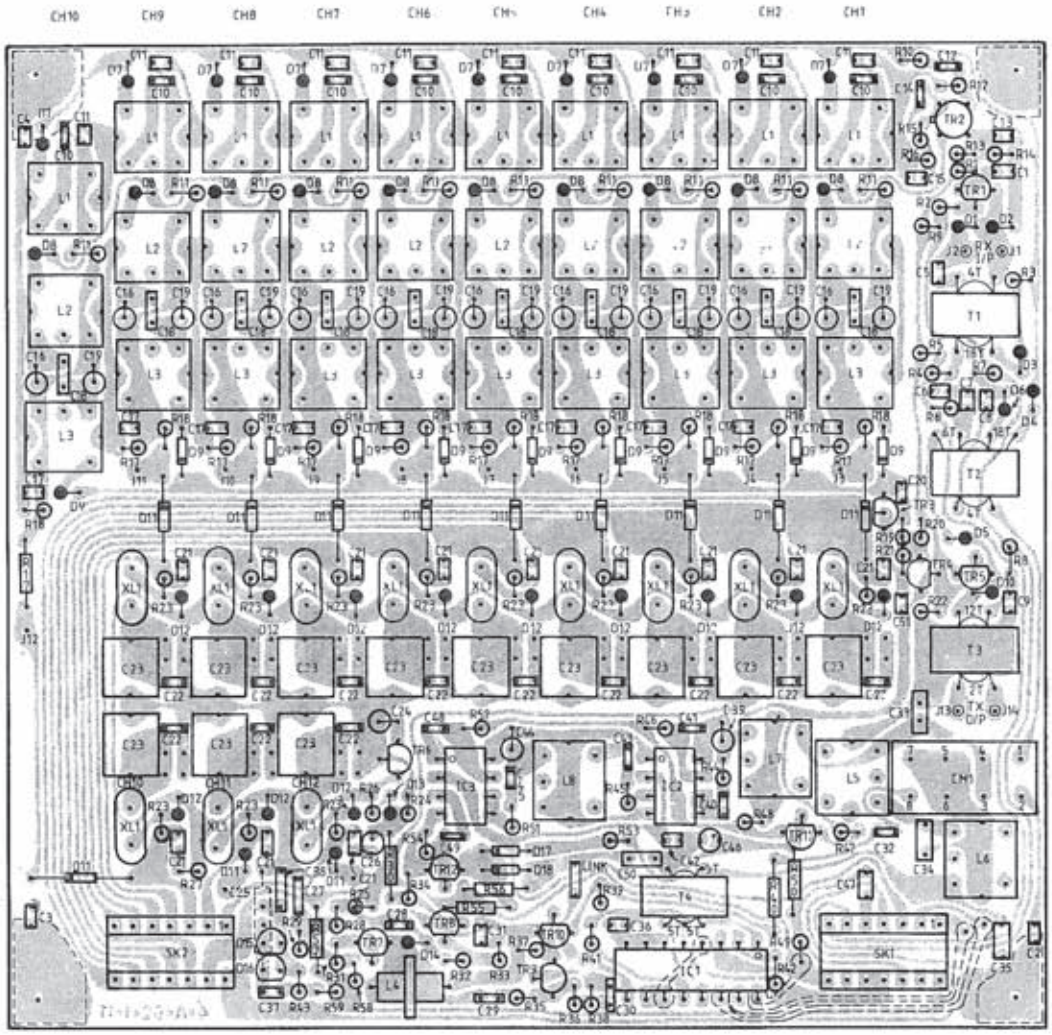

SK1

TO SK2 on I.F. BOARD	
PIN No	CONNECTION
1	I.F.
2	I.F.
3	RX 6VOLTS
4	TX 6VOLTS
5	0 VOLTS
6	TX SWITCHED ZERO VOLTS
7	RX SWITCHED ZERO VOLTS
8	+VE 10 VOLTS
9	P.T.T.
10	6 VOLTS
11	6 VOLTS
12	NOISE BLANKER
13	N.C.
14	CLARIFIER

SK2

TO SK3 CHANNEL SWITCHING	
PIN No	CONNECTION
1	CHANNEL 12
2	CHANNEL 11
3	CHANNEL 10
4	CHANNEL 9
5	CHANNEL 8
6	CHANNEL 7
7	CHANNEL 6
8	CHANNEL 1
9	CHANNEL 2
10	CHANNEL 3
11	CHANNEL 4
12	CHANNEL 5
13	+VE 10 VOLTS
14	TX 6VOLTS

REV	ECN	BY	DATE

TITLE: SSB FRONT END LAYOUT

DRAWING No: 4-A-12-1-4 | MODEL: R.F.K. 105

DESIGNED: J.W. | DRAWN: G.E.M. | CHECKED: P.L.

SCALE: | DATE: 7/11/80 | SHEET 1 OF 1

WORMALD COMMUNICATIONS — 13 MUMFORD PLACE, BALCATTA, 6023, W.A.

CCT.REF	DESCRIPTION	STORES CODE	MFG	MFG CODE
A1.1	CCT.BOARD; FRONT END	6003	WOCO	4.A.92.1.5
C1.1	CAP,FXD,CER; 100N,50V	1015		
C2.1	CAP,FXD,CER; 100N,50V	1015		
C3.1	CAP,FXD,CER; 100N,50V	1015		
C4.1	CAP,FXD,CER; 100N,50V	1015		
C5.1	CAP,FXD,CER; 100N,50V	1015		
C6.1	CAP,FXD,CER; 100N,50V	1015		
C7.1	CAP,FXD,CER; 100N,50V	1015		
C8.1	CAP,FXD,CER; 100N,50V	1015		
C9.1	CAP,FXD,CER; 100N,50V	1015		
C10.1	REFER FREQ. TABLE			
C11.1	CAP,FXD,CER; 100N,50V	1015		
C12.1	CAP,FXD,CER; 10N,63V	1304	PHIL	629 SERIES
C13.1	CAP,FXD,CER; 100N,50V	1015		
C14.1	CAP,FXD,CER; 100PF,NPO,63V	1422	PHIL	632 SERIES
C15.1	CAP,FXD,CER; 100N,50V	1015		
C16.1	REFER FREQ. TABLE			
C17.1	CAP,FXD,CER; 100N,50V	1015		
C18.1	REFER FREQ. TABLE			
C19.1	REFER FREQ. TABLE			
C20.1	CAP,FXD,CER; 1N0,63V	1301	PHIL	629 SERIES
C21.1	CAP,FXD,CER; 100N,50V	1015		
C22a.1	VALUE & TEMP CO-EFFICIENT	SELECTED TO MATCH CRYSTAL		
C22b.1	VALUE & TEMP CO-EFFICIENT	SELECTED TO MATCH CRYSTAL		
C23.1	CAP,VARIABLE; 1-5PF	2011	PHIL	809 SERIES
C24.1	CAP,FXD,STYR; 470PF,250V	0848	PHIL	MICROPOCO
C25.1	CAP,FXD,CER; 100PF, NPO,63V	1422	PHIL	632 SERIES
C26.1	CAP,FXD,TANT; 1uF,35V	1685		
C27.1	CAP,FXD,CER; 1N0,63V	1301	PHIL	629 SERIES
C28.1	CAP,FXD,CER; 10N,63V	1304	PHIL	629 SERIES
C29.1	CAP,FXD,CER; 10N,63V	1304	PHIL	629 SERIES
C30.1	CAP,FXD,CER; 100PF,NPO,63V	1422	PHIL	632 SERIES
C31.1	CAP,FXD,CER; 100N,50V	1015		
C32.1	CAP,FXD,CER; 10N,63V	1304	PHIL	629 SERIES
C33.1	CAP,FXD,STYR; 6N8,63V	0755	PHIL	MICROPOCO
C34.1	CAP,FXD,POLY; 3N3,100V	1504		
C35.1	CAP,FXD,STYR; 6N8,63V	0755	PHIL	MICROPOCO
C36.1	CAP,FXD,CER; 100N,50V	1015		
C37.1	CAP,FXD,CER; 100N,50V	1015		
C38.1	CAP,FXD,CER; 10N,63V	1304	PHIL	629 SERIES
C39.1	CAP,FXD,STYR; 1N8,250V	0750	PHIL	MICROPOCO
C40.1	CAP,FXD,CER; 1N0,63V	1301	PHIL	629 SERIES
C41.1	CAP,FXD,CER; 10N,63V	1304	PHIL	629 SERIES
C42.1	CAP,FXD,CER: 100N,50V	1015		
C43.1	CAP,FXD,CER; 1N0,63V	1301	PHIL	629 SERIES
C44.1	CAP,FXD,STYR; 1N8,250V	0750	PHIL	MICROPOCO
C45.1	CAP,FXD,CER; 1N0,63V	1301	PHIL	629 SERIES
C46.1	CAP,FXD,TANT; 1uF,35V	1685		
C47.1	CAP,FXD,CER; 100N,50V	1015		
C48.1	CAP,FXD,CER; 10N,63V	1304	PHIL	629 SERIES
C49.1	CAP,FXD,CER; 1N0,63V	1301	PHIL	629 SERIES
C50.1	CAP,FXD,CER; 1N0,63V	1301	PHIL	629 SERIES
C51.1	CAP,FXD,CER; 100N,50V	1015		

TITLE PARTS LISTING - 4.A.23.1.5
S.S.B. FRONT END, RFK105

DRAWING No | MODEL

DESIGNED | DRAWN | CHECKED
SCALE | DATE | SHEET OF

WORMALD COMMUNICATIONS

REV	ECN	BY	DATE

CCT.REF	DESCRIPTION	STORES CODE	MFG	MFG CODE
CM-1.1	MIXER; BALANCED	5050	CIM	CM-1
D1.1	DIODE; G.P. SMALL SIGNAL	3302	FAIR	1N4148
D2.1	DIODE; SWITCHING	3306	H.P.	5082-3188
D3.1	DIODE; G.P. SMALL SIGNAL	3302	FAIR	1N4148
D4.1	DIODE; G.P. SMALL SIGNAL	3302	FAIR	1N4148
D5.1	DIODE; G.P. SMALL SIGNAL	3302	FAIR	1N4148
D6.1	DIODE; G.P. SMALL SIGNAL	3302	FAIR	1N4148
D7.1	DIODE; G.P. SMALL SIGNAL	3302	FAIR	1N4148
D8.1	DIODE; G.P. SMALL SIGNAL	3302	FAIR	1N4148
D9.1	DIODE; G.P. SMALL SIGNAL	3302	FAIR	1N4148
D10.1	DIODE; G.P. SMALL SIGNAL	3302	FAIR	1N4148
D11.1	DIODE; G.P. SMALL SIGNAL	3302	FAIR	1N4148
D12.1	DIODE; G.P. SMALL SIGNAL	3302	FAIR	1N4148
D13.1	DIODE; G.P. SMALL SIGNAL	3302	FAIR	1N4148
D14.1	DIODE; G.P. SMALL SIGNAL	3302	FAIR	1N4148
D15.1	DIODE; VARICAP	3301	MOT	MV2209
D16.1	DIODE; VARICAP	3301	MOT	MV2209
D17.1	DIODE; G.P. SMALL SIGNAL	3302	FAIR	1N4148
D18.1	DIODE; G.P. SMALL SIGNAL	3302	FAIR	1N4148
IC1.1	INT.CCT; TRIPLE, D.P,S.T,SWITCH	2372		CD4053
IC2.1	INT.CCT; R.F.AMP	2385	PLES	SL1612C
IC3.1	INT.CCT; R.F.AMP	2385	PLES	SL1612C
J1.1	SMALL BOARD PIN	4404		
J2.1	SMALL BOARD PIN	4404		
J3.1	SMALL BOARD PIN	4404		
J4.1	SMALL BOARD PIN	4404		
J5.1	SMALL BOARD PIN	4404		
J6.1	SMALL BOARD PIN	4404		
J7.1	SMALL BOARD PIN	4404		
J8.1	SMALL BOARD PIN	4404		
J9.1	SMALL BOARD PIN	4404		
J10.1	SMALL BOARD PIN	4404		
J11.1	SMALL BOARD PIN	4404		
J12.1	SMALL BOARD PIN	4404		
J13.1	SMALL BOARD PIN	4404		
J14.1	SMALL BOARD PIN	4404		
L1.1	COIL, ADJUSTABLE	REFER	WOCO	
L2.1	COIL, ADJUSTABLE	FREQ	WOCO	
L3.1	COIL, ADJUSTABLE	TABLE	WOCO	
L4.1	COIL, FIXED	3221	AEG	VPC330/10
L5.1	COIL, ADJUSTABLE	3215	TOKO	F772
L6.1	COIL, ADJUSTABLE	3215	TOKO	F772
L7.1	COIL, ADJUSTABLE	3215	TOKO	F772
L8.1	COIL, ADJUSTABLE	3215	TOKO	F772
R1.1	RES,FXD,CBN; 1K,.25W,5%	0249	PHIL	CR25
R2.1	RES,FXD,CBN; 10K,.25W,5%	0261	PHIL	CR25
R3.1	RES,FXD,CBN; S.O.T. .25W,5%		PHIL	CR25
R4.1	RES,FXD,CBN; 2K2,.25W,5%	0253	PHIL	CR25
R5.1	RES,FXD,CBN; 10K,.25W,5%	0261	PHIL	CR25
R6.1	RES,FXD,CBN; 330,.25W,5%	0243	PHIL	CR25

REV	ECN	BY	DATE

TITLE PARTS LISTING - 4.A.23.1.5
S.S.B. FRONT END, RFK105

DRAWING No | MODEL
DESIGNED | DRAWN | CHECKED
SCALE | DATE | SHEET OF

WORMALD COMMUNICATIONS

CCT.REF	DESCRIPTION	STORES CODE	MFG	MFG CODE
R7.1	RES,FXD,CBN; 2K2,.25W,5%	0253	PHIL	CR25
R8.1	RES,FXD,CBN; 330,.25W,5%	0243	PHIL	CR25
R9.1	RES,FXD,CBN, 10K,.25W,5%	0261	PHIL	CR25
R10.1	RES,FXD,CBN; 330,.25W,5%	0243	PHIL	CR25
R11.1	RES,FXD,CBN, 4K7,.25W,5%	0257	PHIL	CR25
R12.1	RES,FXD,CBN, 100K,.25W,5%	0273	PHIL	CR25
R13.1	RES,FXD,CBN; 47K,.25W,5%	0269	PHIL	CR25
R14.1	RES,FXD,CBN; 22K,.25W,5%	0265	PHIL	CR25
R15.1	RES,FXD,CBN; 100,.25W,5%	0237	PHIL	CR25
R16.1	RES,FXD,CBN; 270,.25W,5%	0242	PHIL	CR25
R17.1	RES,FXD,CBN; 10K,.25W,5%	0261	PHIL	CR25
R18.1	RES,FXD,CBN; 100,.25W,5%	0237	PHIL	CR25
R19.1	RES,FXD,CBN; 330,.25W,5%	0243	PHIL	CR25
R20.1	RES,FXD,CBN; 100K,.25W,5%	0273	PHIL	CR25
R21.1	RES,FXD,CBN; 100K,.25W,5%	0273	PHIL	CR25
R22.1	RES,FXD,CBN; 1K,.25W,5%	0249	PHIL	CR25
R23.1	RES,FXD,CBN; 470,.25W,5%	0245	PHIL	CR25
R24.1	RES,FXD,CBN; 56K,.25W,5%	0270	PHIL	CR25
R25.1	RES,FXD,CBN; 47,.25W,5%	0233	PHIL	CR25
R26.1	RES,FXD,CBN; 2K2,.25W,5%	0253	PHIL	CR25
R27.1	RES,FXD,CBN; 4K7,.25W,5%	0257	PHIL	CR25
R28.1	RES,FXD,CBN; 68K,.25W,5%	0271	PHIL	CR25
R29.1	RES,FXD,CBN; 10K,.25W,5%	0261	PHIL	CR25
R30.1	RES,FXD,CBN; 22K,.25W,5%	0265	PHIL	CR25
R31.1	RES,FXD,CBN; 220,.25W,5%	0241	PHIL	CR25
R32.1	RES,FXD,CBN; 10K,.25W,5%	0261	PHIL	CR25
R33.1	RES,FXD,CBN; 220K,.25W,5%	0277	PHIL	CR25
R34.1	RES,FXD,CBN; 22K,.25W,5%	0265	PHIL	CR25
R35.1	RES,FXD,CBN; 47,.25W,5%	0233	PHIL	CR25
R36.1	RES,FXD,CBN; 1K,.25W,5%	0249	PHIL	CR25
R37.1	RES,FXD,CBN; 1K,.25W,5%	0249	PHIL	CR25
R38.1	RES,FXD,CBN; 220,.25W,5%	0241	PHIL	CR25
R39.1	RES,FXD,CBN; 330,.25W,5%	0243	PHIL	CR25
R40.1	RES,FXD,CBN; 47,.25W,5%	0233	PHIL	CR25
R41.1	RES,FXD,CBN; 56,.25W,5%	0234	PHIL	CR25
R42.1	RES,FXD,CBN; 56,.25W,5%	0234	PHIL	CR25
R43.1	RES,FXD,CBN; 47K,.25W,5%	0269	PHIL	CR25
R44.1	RES,FXD,CBN; 100,.25W,5%	0237	PHIL	CR25
R45.1	RES,FXD,CBN; 100,.25W,5%	0237	PHIL	CR25
R46.1	RES,FXD,CBN; 10K,.25W,5%	0261	PHIL	CR25
R47.1	RES,FXD,CBN; 1K,.25W,5%	0249	PHIL	CR25
R48.1	RES,FXD,CBN; 4K7,.25W,5%	0257	PHIL	CR25
R49.1	RES,FXD,CBN; 10K,.25W,5%	0261	PHIL	CR25
R50.1	RES,FXD,CBN; 220K,.25W,5%	0277	PHIL	CR25
R51.1	RES,FXD,CBN; 1K,.25W,5%	0249	PHIL	CR25
R52.1	RES,FXD,CBN; 10K,.25W,5%	0261	PHIL	CR25
R53.1	RES,FXD,CBN; 3K3,.25W,5%	0255	PHIL	CR25
R54.1	RES,FXD,CBN; 470,.25W,5%	0245	PHIL	CR25
R55.1	RES,FXD,CBN; 10K,.25W,5%	0261	PHIL	CR25
R56.1	RES,FXD,CBN; 100K,.25W,5%	0273	PHIL	CR25
R57.1	RES,FXD,CBN; 330K,.25W,5%	0279	PHIL	CR25
R58.1	RES,FXD,CBN; 220K,.25W,5%	0277	PHIL	CR25
R59.1	RES,FXD,CBN; 47K,.25W,5%	0269	PHIL	CR25
SK1.1	SOCKET; 14 PIN DIL	4451		
SK2.1	SOCKET; 14 PIN DIL	4451		

TITLE PARTS LISTING - 4.A.23.1.5
S.S.B. FRONT END, RFK105

DRAWING No		MODEL
DESIGNED	DRAWN	CHECKED
SCALE	DATE	SHEET OF

WORMALD COMMUNICATIONS 98 Guthrie Street Osborne Park 6017 W.A.

REV	ECN	BY	DATE

CCT.REF	DESCRIPTION	STORES CODE	MFG	MFG CODE
T1.1	TRANS; WIDEBAND RF	3041	WOCO	T1.1
T2.1	TRANS; WIDEBAND RF	3041	WOCO	T2.1
T3.1	TRANS; WIDEBAND RF	3041	WOCO	T3.1
T4.1	TRANS; WIDEBAND RF	3041	WOCO	T4.1
TR1.1	TRANSISTOR; PNP,40V,500mA,500mW	2211	NSC	2N3638A
TR2.1	F.E.T.; R.F. AMP	2261	PHIL	BFR84
TR3.1	F.E.T.; R.F. AMP	2246	MOT	2N5485
TR4.1	F.E.T.; R.F. AMP	2246	MOT	2N5485
TR5.1	TRANSISTOR; NPN,30V,200mA,500mW	2201	NSC	BC319
TR6.1	TRANSISTOR; NPN,30V,200mA,500mW	2201	NSC	BC319
TR7.1	TRANSISTOR; NPN,30V,200mA,500mW	2201	NSC	BC319
TR8.1	TRANSISTOR; PNP,40V,500mA,500mW	2211	NSC	2N3638A
TR9.1	F.E.T.; R.F. AMP	2246	MOT	2N5485
TR10.1	TRANSISTOR; NPN,30V,200mA,500mW	2201	NSC	BC319
TR11.1	TRANSISTOR; PNP,40V,500mA,500mW	2211	NSC	2N3638A
TR12.1	TRANSISTOR; NPN,30V,200mA,500mW	2201	NSC	BC319
XL101.1	CRYSTAL; CASE HC18/U,SPEC P05F CRYSTAL FREQ = S.C.F. + 1650KHZ	XL101.1	HY-Q	

TITLE PARTS LISTING - 4.A.23.1.5 S.S.B. FRONT END, RFK105			
DRAWING No		MODEL	
DESIGNED	DRAWN	CHECKED	
SCALE	DATE	SHEET OF	
WORMALD COMMUNICATIONS			

REV	ECN	BY	DATE

SECTION 8.4

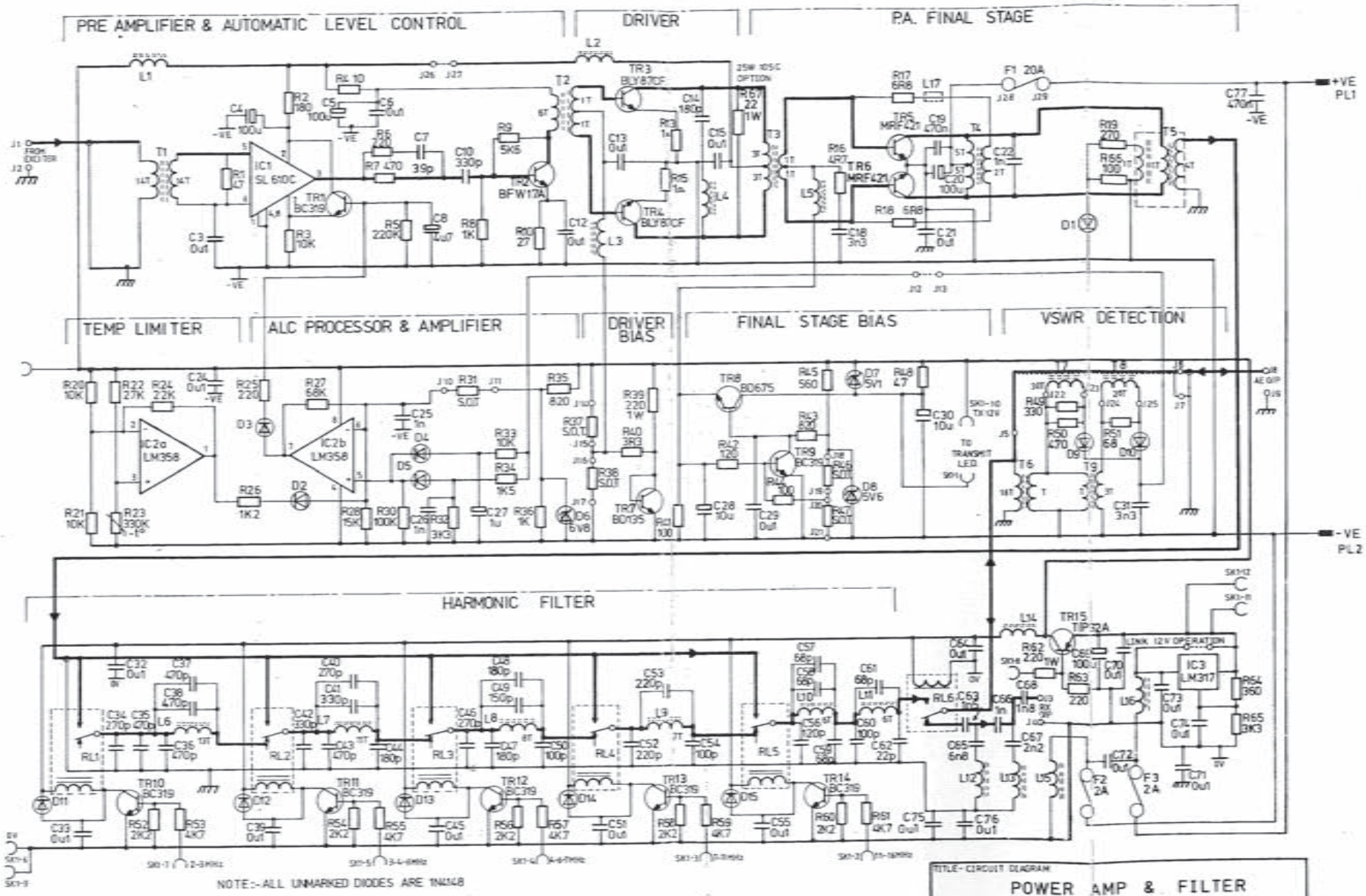
PRE AMPLIFIER & AUTOMATIC LEVEL CONTROL
DRIVER
P.A. FINAL STAGE
TEMP LIMITER
ALC PROCESSOR & AMPLIFIER
DRIVER BIAS
FINAL STAGE BIAS
VSWR DETECTION
HARMONIC FILTER
+VE PL1
-VE PL2
IC1 SL 610C
IC2a LM358
IC2b LM358
IC3 LM317
TR3 BLY87CF
TR4 BLY87CF
TR5 MRF421
TR6 MRF421
TR8 BD675
TR9 BC319
TR7 BD135
TR15 TIP32A
TR10 BC319
TR11 BC319
TR12 BC319
TR13 BC319
TR14 BC319
F1 20A
F2 2A
F3 2A
NOTE:-ALL UNMARKED DIODES ARE 1N4148
TITLE- CIRCUIT DIAGRAM
POWER AMP & FILTER
DRAWING No. 4-A-42-3-4
MODEL R.E.K. 105
DESIGNED J.W.
DRAWN S.J.L.
CHECKED J.W.
SCALE
DATE 28/9/79
SHEET 1 OF 1
WORMALD COMMUNICATIONS

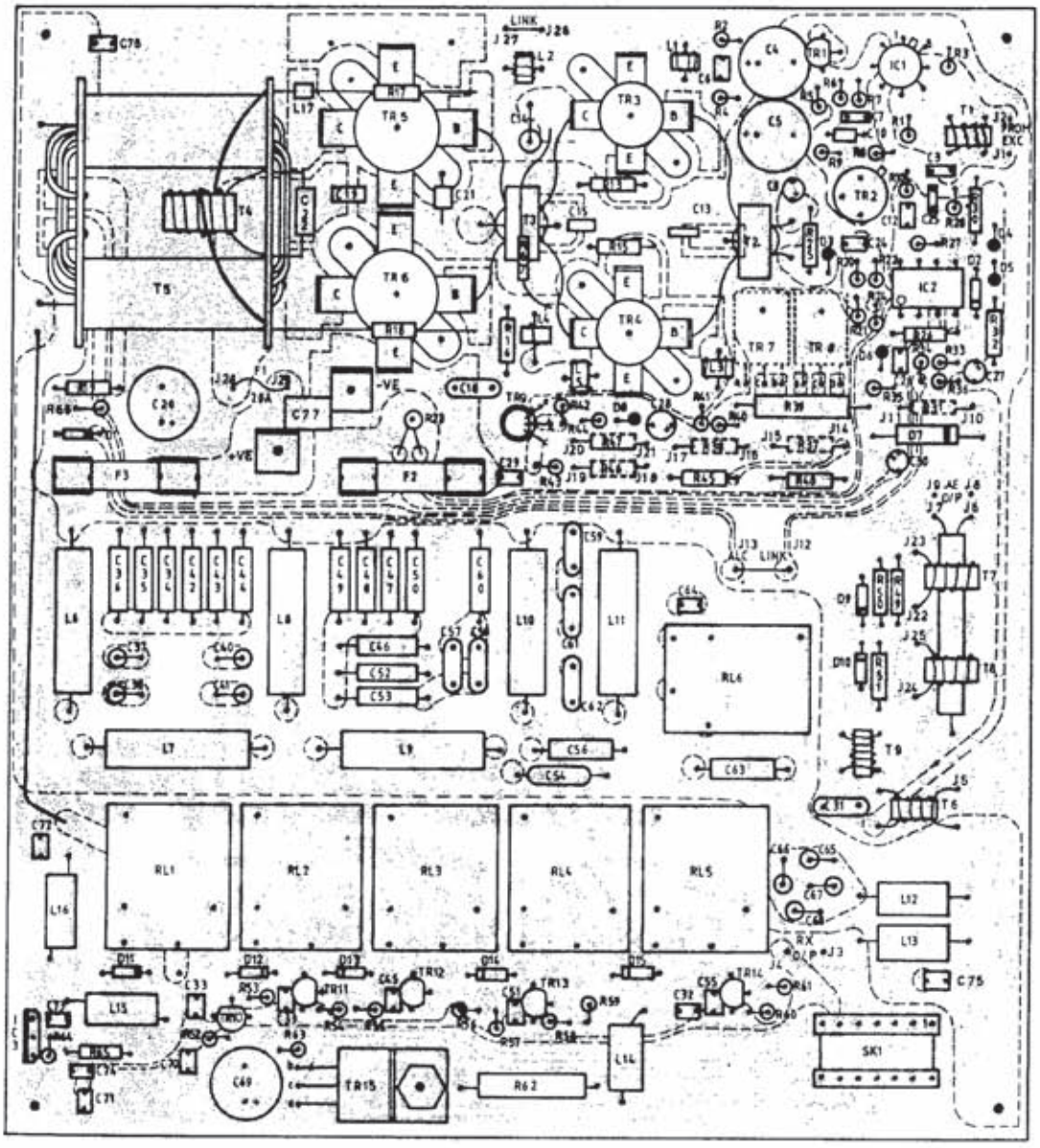

SK1	
TO SK2 CHANNEL SWITCHING	
PIN No	CONNECTION
1	T.X. Lamp
2	11-16 MHz
3	7-11 MHz
4	4·6-7 MHz
5	3-4·6MHz
6	0 volts
7	2-3 MHz
8	Transmit Switching
9	0 volts
10	T.X. Switched 12volts
11	12volts
12	12volts
13	N.C.
14	N.C.

TITLE - COMPONENT LAYOUT			
POWER AMPLIFIER & FILTER			
DRAWING No. 4·A·12·3·3		MODEL R.F.K. 105	
DESIGNED J.W.	DRAWN S.J.L.	CHECKED J.W.	
SCALE	DATE 7/11/79	SHEET 1 OF 1	
WORMALD COMMUNICATIONS 13 MUMFORD PL. BALCATTA WESTERN AUSTRALIA			

CCT.REF	DESCRIPTION	STORE CODE	MFG	MFG CODE
A1.3	CCT. BOARD; POWER AMP.	6005	WOCO	4.A.92.3.6
A2.3	CCT. BOARD; PA TRANSFORMER	6016	WOCO	4.A.92.4.2
A3.3	CCT. BOARD; PA TRANSFORMER	6017	WOCO	4.A.92.5.1
C3.3	CAP,FXD,CERAMIC; 100N,50V	1015		
C4.3	CAP,FXD,ELECTRO; 100UF,16V	1752		
C5.3	CAP,FXD,ELECTRO; 100UF,16V	1752		
C6.3	CAP,FXD,CERAMIC; 100N,50V	1015		
C7.3	CAP,FXD,CERAMIC; 39PF,NPO,63V	1417	PHIL	632 SERIES
C8.3	CAP,FXD,TANT; 4U7,16V	1649		
C10.3	CAP,FXD,CERAMIC; 330PF,63V	1323	PHIL	629 SERIES
C12.3	CAP,FXD,CERAMIC; 100N,50V	1015		
C13.3	CAP,FXD,CER.CHIP; 100N,50V	0920	MUR	GR43
C14.3	CAP,FXD,STYR; 180PF,250V	0845	PHIL	MICROPOCO
C15.3	CAP,FXD,CER.CHIP; 100N,50V	0920	MUR	GR43
C18.3	CAP,FXD,CERAMIC; 3N3,600V	1053		
C19.3	CAP,FXD,CER.CHIP; 470N,50V	0925	MUR	GR44-1
C20.3	CAP,FXD,ELECTRO; 100UF,16V	1752		
C21.3	CAP,FXD,CERAMIC; 100N,50V	1015		
C22.3	CAP,FXD,STYR; 1N,250V	0808	PHIL	MICROPOCO
C24.3	CAP,FXD,CERAMIC; 100N,50V	1015		
C25.3	CAP,FXD,CERAMIC; 1N,63V	1301	PHIL	629 SERIES
C26.3	CAP,FXD,CERAMIC; 1N,63V	1301	PHIL	629 SERIES
C27.3	CAP,FXD,TANT; 1UF,35V	1685		
C28.3	CAP,FXD,TANT; 10UF,16V	1651		
C29.3	CAP,FXD,CERAMIC; 100N,50V	1015		
C30.3	CAP,FXD,TANT; 10UF,16V	1651		
C31.3	CAP,FXD,CERAMIC; 3N3,600V	1053		
C32.3	CAP,FXD,CERAMIC; 100N,50V	1015		
C33.3	CAP,FXD,CERAMIC; 100N,50V	1015		
C34.3	CAP,FXD,STYR; 270PF,250V	0848	PHIL	MICROPOCO
C35.3	CAP,FXD,STYR; 470PF,250V	0851	PHIL	MICROPOCO
C36.3	CAP,FXD,STYR; 470PF,250V	0851	PHIL	MICROPOCO
C37.3	CAP,FXD,STYR; 470PF,250V	0851	PHIL	MICROPOCO
C38.3	CAP,FXD,STYR; 470PF,250V	0851	PHIL	MICROPOCO
C39.3	CAP,FXD,CERAMIC; 100N,50V	1015		
C40.3	CAP,FXD,STYR; 270PF,250V	0848	PHIL	MICROPOCO
C41.3	CAP,FXD,STYR; 330PF,250V	0849	PHIL	MICROPOCO
C42.3	CAP,FXD,STYR; 330PF,250V	0849	PHIL	MICROPOCO
C43.3	CAP,FXD,STYR; 470PF,250V	0851	PHIL	MICROPOCO
C44.3	CAP,FXD,STYR; 180PF,250V	0845	PHIL	MICROPOCO
C45.3	CAP,FXD,CERAMIC; 100N,50V	1015		
C46.3	CAP,FXD,STYR; 270PF,250V	0848	PHIL	MICROPOCO
C47.3	CAP,FXD,STYR; 180PF,250V	0845	PHIL	MICROPOCO
C48.3	CAP,FXD,STYR; 180PF,250V	0845	PHIL	MICROPOCO
C49.3	CAP,FXD,STYR; 150PF,250V	0844	PHIL	MICROPOCO
C50.3	CAP,FXD,STYR; 100PF,250V	0842	PHIL	MICROPOCO
C51.3	CAP,FXD,CERAMIC; 100N,50V	1015		
C52.3	CAP,FXD,STYR; 220PF,250V	0846	PHIL	MICROPOCO
C53.3	CAP,FXD,STYR; 220PF,250V	0846	PHIL	MICROPOCO
C54.3	CAP,FXD,STYR; 100PF,250V	0842	PHIL	MICROPOCO
C55.3	CAP,FXD,CERAMIC; 100N,50V	1015		
C56.3	CAP,FXD,STYR; 120PF,250V	0843	PHIL	MICROPOCO
C57.3	CAP,FXD,CERAMIC; 68PF,N750,500V	1042		
C58.3	CAP,FXD,CERAMIC; 68PF,N750,500V	1042		
C59.3	CAP,FXD,CERAMIC; 68PF,N750,500V	1042		

REV	ECN	BY	DATE

TITLE
PARTS LISTING - 4.A.23.3.3
P.C. & FILTER - RFK105

DRAWING No | MODEL

DESIGNED | DRAWN | CHECKED
SCALE | DATE 15-6-80 | SHEET 1 OF 5

R.F.SYSTEMS 88 GUTHRIE ST., OSBORNE PARK, PERTH W.A. 6017

CCT.REF	DESCRIPTION	STORE CODE	MFG	MFG CODE
C60.3	CAP,FXD,STYR; 100PF,250v	0842	PHIL	MICROPOCO
C61.3	CAP,FXD,CERAMIC; 68PF,N750,500V	1004		
C62.3	CAP,FXD,CERAMIC; 22PF,NPO,500V	1039		
C63.3	CAP,FXD,STYR; 1N5,250v	0749	PHIL	MICROPOCO
C64.3	CAP,FXD,CERAMIC; 100N,50V	1015		
C65.3	CAP,FXD,STYR; 6N8,63V	0755	PHIL	MICROPOCO
C66.3	CAP,FXD,STYR; 1N,250V	0808	PHIL	MICROPOCO
C67.3	CAP,FXD,STYR; 2N2,250V	0752	PHIL	MICROPOCO
C68.3	CAP,FXD,STYR; 1N8,250V	0750	PHIL	MICROPOCO
C69.3	CAP,FXD,ELECTRO; 100UF,16V	1752		
C70.3	CAP,FXD,CERAMIC; 100N,50v	1015		
C71.3	CAP,FXD,CERAMIC; 100N,50V	1015		
C72.3	CAP,FXD,CERAMIC; 100N,50V	1015		
C73.3	CAP,FXD,CERAMIC; 100N,50V	1015		
C74.3	CAP,FXD,CERAMIC; 100N,50V	1015(24V OPT)		
C75.3	CAP,FXD,CERAMIC; 100N,50V	1015		
C76.3	CAP,FXD,CERAMIC; 100N,50V	1015		
C77.3	CAP,FXD,CHIP; 470N,50V	0925	MUR	GR44-1
D1.3	DIODE; G.P. SMALL SIGNAL	3302	FAIR	1N4148
D2.3	DIODE; G.P. SMALL SIGNAL	3302	FAIR	1N4148
D3.3	DIODE; G.P. SMALL SIGNAL	3302	FAIR	1N4148
D4.3	DIODE; G.P. SMALL SIGNAL	3302	FAIR	1N4148
D5.3	DIODE; G.P. SMALL SIGNAL	3302	FAIR	1N4148
D6.3	DIODE; ZENER 6V8 400mW	3317	PHIL	BZX88-C6V8
D7.3	DIODE; ZENER 5V1 5W	3327	MOT	1N5338
D8.3	DIODE; ZENER 5V6 400mW	3319	PHIL	BZX88-C5V6
D9.3	DIODE; G.P. SMALL SIGNAL	3302	FAIR	1N4148
D10.3	DIODE; G.P. SMALL SIGNAL	3302	FAIR	1N4148
D11.3	DIODE; G.P. SMALL SIGNAL	3302	FAIR	1N4148
D12.3	DIODE; G.P. SMALL SIGNAL	3302	FAIR	1N4148
D13.3	DIODE; G.P. SMALL SIGNAL	3302	FAIR	1N4148
D14.3	DIODE; G.P. SMALL SIGNAL	3302	FAIR	1N4148
D15.3	DIODE; G.P. SMALL SIGNAL	3302	FAIR	1N4148
F2.3	FUSE; 20X5mm,2AMP	4803		
F3.3	FUSE; 20X5mm,2AMP	4803		
FC1.3	FUSE CLIP	4401	UTIL	H3978
FC2.3	FUSE CLIP	4401	UTIL	H3978
FC3.3	FUSE CLIP	4401	UTIL	H3978
FC4.3	FUSE CLIP	4401	UTIL	H3978
IC1.3	INT.CCT; R.F. AMP.	2388	PLES	SL610C
IC2.3	INT.CCT; DUAL OP.AMP	2350	NSC	LM358N
IC3.3	INT.CCT; ADJ. REGULATOR	2383(24V OPT)	NSC	LM317
J1.3	SMALL BOARD PIN	4404		
J2.3	SMALL BOARD PIN	4404		
J3.3	SMALL BOARD PIN	4404		
J4.3	SMALL BOARD PIN	4404		
J5.3	SMALL BOARD PIN	4404		
J6.3	SMALL BOARD PIN	4404		
J7.3	SMALL BOARD PIN	4404		
J8.3	SMALL BOARD PIN	4404		
J9.3	SMALL BOARD PIN	4404		
J10.3	SMALL BOARD PIN	4404		
J11.3	SMALL BOARD PIN	4404		

TITLE
PARTS LISTING - 4.A.23.3.3
P.A. & FILTER - RFK105

DRAWING No. | MODEL

DESIGNED | DRAWN | CHECKED
SCALE | DATE | SHEET OF

R.F.SYSTEMS 96 GUTHRIE ST., OSBORNE PARK. PERTH W.A. 6017

REV	ECN	BY	DATE

CCT.REF	DESCRIPTION	STORE CODE	MFG	MFG CODE
J12.3	SMALL BOARD PIN	4404		
J13.3	SMALL BOARD PIN	4404		
J14.3	SMALL BOARD PIN	4404		
J15.3	SMALL BOARD PIN	4404		
J16.3	SMALL BOARD PIN	4404		
J17.3	SMALL BOARD PIN	4404		
J18.3	SMALL BOARD PIN	4404		
J19.3	SMALL BOARD PIN	4404		
J20.3	SMALL BOARD PIN	4404		
J21.3	SMALL BOARD PIN	4404		
J22.3	SMALL BOARD PIN	4404		
J23.3	SMALL BOARD PIN	4404		
J24.3	SMALL BOARD PIN	4404		
J25.3	SMALL BOARD PIN	4404		
J26.3	SMALL BOARD PIN	4404		
J27.3	SMALL BOARD PIN	4404		
J28.3	SMALL BOARD PIN	4404		
J29.3	SMALL BOARD PIN	4404		
L1.3	CHOKE; RF	3031 CORE	WOCO	L1.3
L2.3	CHOKE; RF	3031 CORE	WOCO	L2.3
L3.3	CHOKE; RF	3031 CORE	WOCO	L3.3
L4.3	CHOKE; RF	3031 CORE	WOCO	L4.3
L5.3	CHOKE; RF	3031 CORE	WOCO	L5.3
L6.3	CHOKE; RF	3038 CORE	WOCO	L6.3
L7.3	CHOKE; RF	3038 CORE	WOCO	L7.3
L8.3	CHOKE; RF	3039 CORE	WOCO	L8.3
L9.3	CHOKE; RF	3039 CORE	WOCO	L9.3
L10.3	CHOKE; RF	3039 CORE	WOCO	L10.3
L11.3	CHOKE; RF	3039 CORE	WOCO	L11.3
L12.3	CHOKE; RF	3037 CORE	WOCO	L12.3
L13.3	CHOKE; RF	3037 CORE	WOCO	L13.3
L14.3	CHOKE; RF	3026 CORE	WOCO	L14.3
L15.3	CHOKE; RF	3026 CORE	WOCO	L15.3
L16.3	CHOKE; RF	3026 CORE	WOCO	L16.3
L17.3	CHOKE; RF	3031 CORE	WOCO	L17.3
PL1.3	PLUG	4503	UTIL	H1151A
PL2.3	PLUG	4503	UTIL	H1151A
R1.3	RES,FXD,CBN; 47,.25W,5%	0233	PHIL	CR25
R2.3	RES,FXD,CBN; 180,.25W,5%	0240	PHIL	CR25
R3.3	RES,FXD,CBN; 10K,.25W,5%	0261	PHIL	CR25
R4.3	RES,FXD,CBN; 10,.25W,5%	0225	PHIL	CR25
R5.3	RES,FXD,CBN; 220K,.25W,5%	0277	PHIL	CR25
R6.3	RES,FXD,CBN; 220,.25W,5%	0241	PHIL	CR25
R7.3	RES,FXD,CBN; 470,.25W,5%	0245	PHIL	CR25
R8.3	RES,FXD,CBN; 1K,.25W,5%	0249	PHIL	CR25
R9.3	RES,FXD,CBN; 5K6,.25W,5%	0258	PHIL	CR25
R10.3	RES,FXD,CBN; 27,.25W,5%	0230	PHIL	CR25
R13.3	RES,FXD,CBN; 1,.25W,5%	0213	PHIL	CR25
R15.3	RES,FXD,CBN; 1,.25W,5%	0213	PHIL	CR25
R16.3	RES,FXD,CBN; 4R7,.25W,5%	0221	PHIL	CR25
R17.3	RES,FXD,CBN; 6R8,.5W,5%	0323	PHIL	CR37
R18.3	RES,FXD,CBN; 6R8,.5W,5%	0323	PHIL	CR37
R19.3	RES,FXD,CBN; 270,.25W,5%	0242	PHIL	CR25

REV	ECN	BY	DATE

TITLE PARTS LISTING - 4.A.23.3.3
P.A. & FILTER - RFK105

DRAWING No.		MODEL
DESIGNED	DRAWN	CHECKED
SCALE	DATE	SHEET OF

R.F.SYSTEMS 86 GUTHRIE ST., OSBORNE PARK, PERTH W.A. 6017

CCT.REF	DESCRIPTION	STORE CODE	MFG	MFG CODE
R20.3	RES,FXD,CBN; 10K,.25W,5%	0261	PHIL	CR25
R21.3	RES,FXD,CBN; 10K,.25W,5%	0261	PHIL	CR25
R22.3	RES,FXD,CBN; 27K,.25W,5%	0266	PHIL	CR25
R23.3	THERMISTOR; NTC,330K,10%	2240	PHIL	CR25
R24.3	RES,FXD,CBN;22K,.25W,5%	0265	PHIL	CR25
R25.3	RES,FXD,CBN; 220,.25W,5%	0241	PHIL	CR25
R26.3	RES,FXD,CBN; 1K2,.25W,5%	0250	PHIL	CR25
R27.3	RES,FXD,CBN; 68K,.25W,5%	0271	PHIL	CR25
R28.3	RES,FXD.CBN; 15K,.25W.5%	0263	PHIL	CR25
R29.3				
R30.3	RES,FXD,CBN; 100K,.25W,5%	0273	PHIL	CR25
R31.3	RES,FXD,CBN; S.O.T,.25W,5%		PHIL	CR25
R32.3	RES,FXD,CBN; 3K3,.25W,5%	0255	PHIL	CR25
R33.3	RES,FXD,CBN; 10K,.25W,5%	0261	PHIL	CR25
R34.3	RES,FXD,CBN; 1K5,.25W,5%	0251	PHIL	CR25
R35.3	RES,FXD,CBN; 820,.25W,5%	0248	PHIL	CR25
R36.3	RES,FXD,CBN; 1K,.25W,5%	0249	PHIL	CR25
R37.3	RES,FXD,CBN; S.O.T,.25W,5%		PHIL	CR25
R38.3	RES,FXD,CBN; S.O.T,.25W,5%		PHIL	CR25
R39.3	RES,FXD,CBN; 220,1W,5%	0441	PHIL	CR25
R40.3	RES,FXD,CBN; 3R3,.25W,5%	0219	PHIL	CR25
R41.3	RES,FXD,CBN; 100,.25W,5%	0237	PHIL	CR25
R42.3	RES,FXD,CBN; 120,.25W,5%	0238	PHIL	CR25
R43.3	RES,FXD,CBN; 820,.25W,5%	0248	PHIL	CR25
R44.3	RES,FXD,CBN; 100,.25W,5%	0237	PHIL	CR25
R45.3	RES,FXD,CBN; 560,.25W,5%	0246	PHIL	CR25
R46.3	RES,FXD,CBN; S.O.T,.25W,5%		PHIL	CR25
R47.3	RES,FXD,CBN; S.O.T,.25W,5%		PHIL	CR25
R48.3	RES,FXD,CBN; 47,.25W,5%	0233	PHIL	CR25
R49.3	RES,FXD,CBN; 330,.25W,5%	0243	PHIL	CR25
R50.3	RES,FXD,CBN; 470,.25W,5%	0245	PHIL	CR25
R51.3	RES,FXD,CBN; 68,.25W,5%	0235	PHIL	CR25
R52.3	RES,FXD,CBN; 2K2,.25W,5%	0253	PHIL	CR25
R53.3	RES,FXD,CBN; 4K7,.25W,5%	0257	PHIL	CR25
R54.3	RES,FXD,CBN; 2K2,.25W,5%	0253	PHIL	CR25
R55.3	RES,FXD,CBN; 4K7,.25W,5%	0257	PHIL	CR25
R56.3	RES,FXD,CBN; 2K2,.25W,5%	0253	PHIL	CR25
R57.3	RES,FXD,CBN; 4K7,.25W,5%	0257	PHIL	CR25
R58.3	RES,FXD,CBN; 2K2,.25W,5%	0253	PHIL	CR25
R59.3	RES,FXD,CBN; 4K7,.25W,5%	0257	PHIL	CR25
R60.3	RES,FXD,CBN; 2K2,.25W,5%	0253	PHIL	CR25
R61.2	RES,FXD,CBN; 4K7,.25W,5%	0257	PHIL	CR25
R62.3	RES,FXD,CBN; 220,.1W,5%	0441	PHIL	CR25
R63.3	RES,FXD,CBN; 220,.25W,5%	0241 (24V OPT)	PHIL	CR25
R64.3	RES,FXD,FILM; 360,.25W,2%	1149 (24V OPT)	PHIL	CR25
R65.3	RES,FXD,CBN; 3K3,.25W5%	0255	PHIL	CR25
R66.3	RES,FXD,CBN; 100,.25W,5%	0237	PHIL	CR25
R67.3	RES,FXD,CBN; 22,1W,5%	0429 (25W OPT)	PHIL	CR25
RL1.3	RELAY: 12 VOLT	5008		RL12
RL2.3	RELAY; 12 VOLT	5008		RL12
RL3.3	RELAY; 12 VOLT	5008		RL12
RL4.3	RELAY; 12 VOLT	5008		RL12
RL5.3	RELAY; 12 VOLT	5008		RL12
RL6.3	RELAY; 12 VOLT	5008		RL12
SK1.3	SOCKET; 14 PIN DIL	4451	AMPH	FRC-D14

TITLE PARTS LISTING - 4.A.23.3.3
P.A. & FILTER - RFK105

DRAWING No | MODEL

DESIGNED | DRAWN | CHECKED
SCALE | DATE | SHEET OF

WORMALD COMMUNICATIONS

REV	ECN	BY	DATE

CCT.REF	DESCRIPTION	STORE CODE	MFG	MFG CODE
T1.3	TRANS; WIDEBAND RF	3032 CORE	WOCO	T1.3
T2.3	TRANS; WIDEBAND RF	3041 CORE	WOCO	T2.3
T3.3	TRANS; WIDEBAND RF	3041 CORE	WOCO	T3.3
T4.3	TRANS; WIDEBAND RF	3036 CORE	WOCO	T4.3
T5.3	TRANS; WIDEBAND RF	3042 2off CORE	WOCO	T6.3
T6.3	TRANS; WIDEBAND RF	3040 CORE	WOCO	T7.3
T7.3	TRANS; WIDEBAND RF	3033 CORE	WOCO	T8.3
T8.3	TRANS; WIDEBAND RF	3033 CORE	WOCO	T9.3
T9.3	TRANS; WIDEBAND RF	3032 CORE	WOCO	T10.3
TR1.3	TRANSISTOR; NPN,30V,200mA,500mW	2201	NSC	BC319
TR2.3	TRANSISTOR; NPN,25V,300mA,1.5W	2258	PHIL	BFW17A
TR3.3	TRANSISTOR; NPN,18V,3.5A,18W	2257	PHIL	BLY87CF
TR4.3	TRANSISTOR; NPN,18V,3.5A,18W	2257	PHIL	BLY87CF
TR5.3	TRANSISTOR; NPN,20V,20A,200W	2262	MOT	MRF421(12V)
TR6.3	TRANSISTOR; NPN,20V,20A,200W	2262	MOT	MRF421(12V)
TR5.3	TRANSISTOR; NPN,35V,12A,200W	2269	MOT	MRF422(24V)
TR6.3	TRANSISTOR; NPN,35V,12A,200W	2269	MOT	MRF422(24V)
TR7.3	TRANSISTOR; NPN,45V,1A,8W	2255	PHIL	BD135
TR8.3	TRANSISTOR; PNP,DARL,45V,4A,40W	2260	PHIL	BD675
TR9.3	TRANSISTOR; NPN,30V,200mA,500mW	2201	NSC	BC319
TR10.3	TRANSISTOR; NPN,30V,200mA,500mW	2201	NSC	BC319
TR11.3	TRANSISTOR; NPN,30V,200mA,500mW	2201	NSC	BC319
TR12.3	TRANSISTOR; NPN,30V,200mA,500mW	2201	NSC	BC319
TR13.3	TRANSISTOR; NPN,30V,200mA,500mW	2201	NSC	BC319
TR14.3	TRANSISTOR; NPN,30V,200mA,500mW	2201	NSC	BC319
TR15.3	TRANSISTOR; PNP,60V,3A,40W	2250	FAIR	TIP32A
TS1.3	TRANSISTOR SPACER	4902	TMLY	7717-4

REV	ECN	BY	DATE

TITLE
PARTS LISTING - 4.A.23.3.3
P.A. & FILTER - RFK105

DRAWING No. | MODEL

DESIGNED | DRAWN | CHECKED
SCALE | DATE | SHEET OF

R.F.SYSTEMS 86 GUTHRIE ST. OSBORNE PARK, PERTH W.A. 6017

9.0 SECTION NINE

DESCRIPTION

The LCO (local control unit with option) is used for controlling all the functions associated with the S.S.B. RFK 105. All controls like volume, mute, channel select, tone call, tune of Tx, are situated on to the front panel and easily accessible. The interconnection with the transceiver is made by means of a 25 way screened cable, terminated on both ends with plugs, these are secured with spring retainers onto both units. An additional speaker jack on the back of the unit, enables the use of an external speaker (Horn speaker) for better intelligibility in a noisy environment.

The main PCB carries all the interconnections needed for the correct function of the options. A diode matrix fitted near the channel switch converts the twelve channels in a BCD code, additional diodes can be fitted for disabling two tone call on preset channels.

Options are fitted by plugging them in the appropriate marked sockets and screwing them in place. A window has to be cut out, this by removing some rungs from the front panel, for fitting of the display option. The clarifier option needs the additional installation on to the front of a potentiometer. Care should be taken when fitting the channel scanner and tone encoder. Each should be protected by means of a mylar sheet layed on top of the solder side. Make sure that the speaker, by swivelling them back, is not fouling the boards.

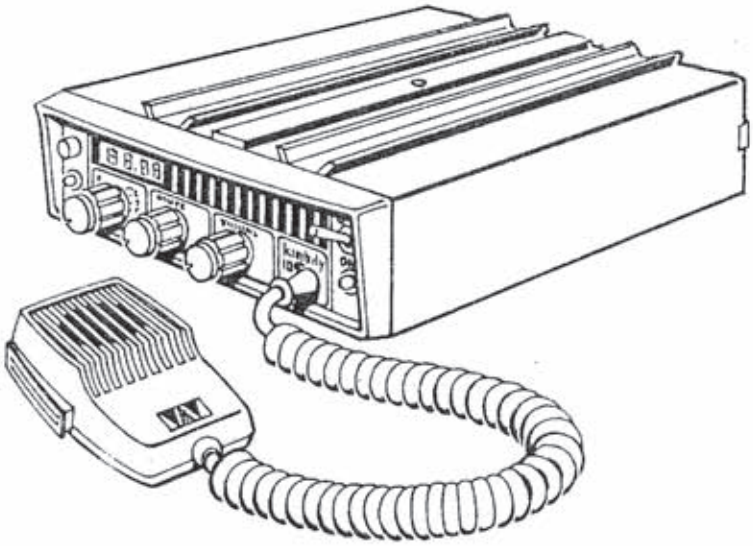

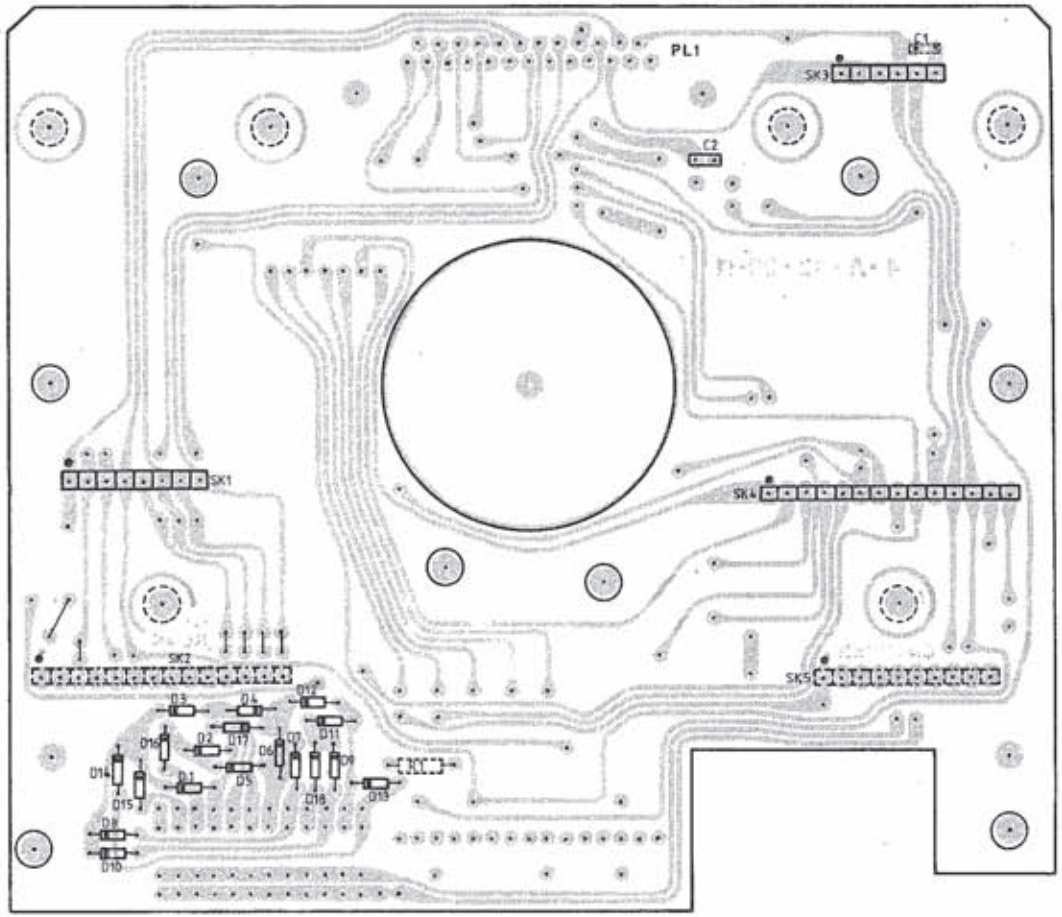

NOTES:

ISS	REV	ECN	BY	DATE	ISS	REV	ECN	BY	DATE	ISS	REV	ECN	BY	DATE
17					9					1	WN	WCHN	DA	27-5-81
18					10					2				
19					11					3				
20					12					4				
21					13					5				
22					14					6				
23					15					7				
24					16					8				

TITLE COMPONENT LAYOUT

LCO LOCAL CONTROL

DRAWING No. 4-A-12-20

MODEL

DESIGNED JW | DRAWN DJJA | CHECKED LSJ

SCALE | DATE 26-5-81 | SHEET 1 OF 1

WORMALD COMMUNICATIONS 13 MUMFORD PL. BALCATTA WESTERN AUSTRALIA

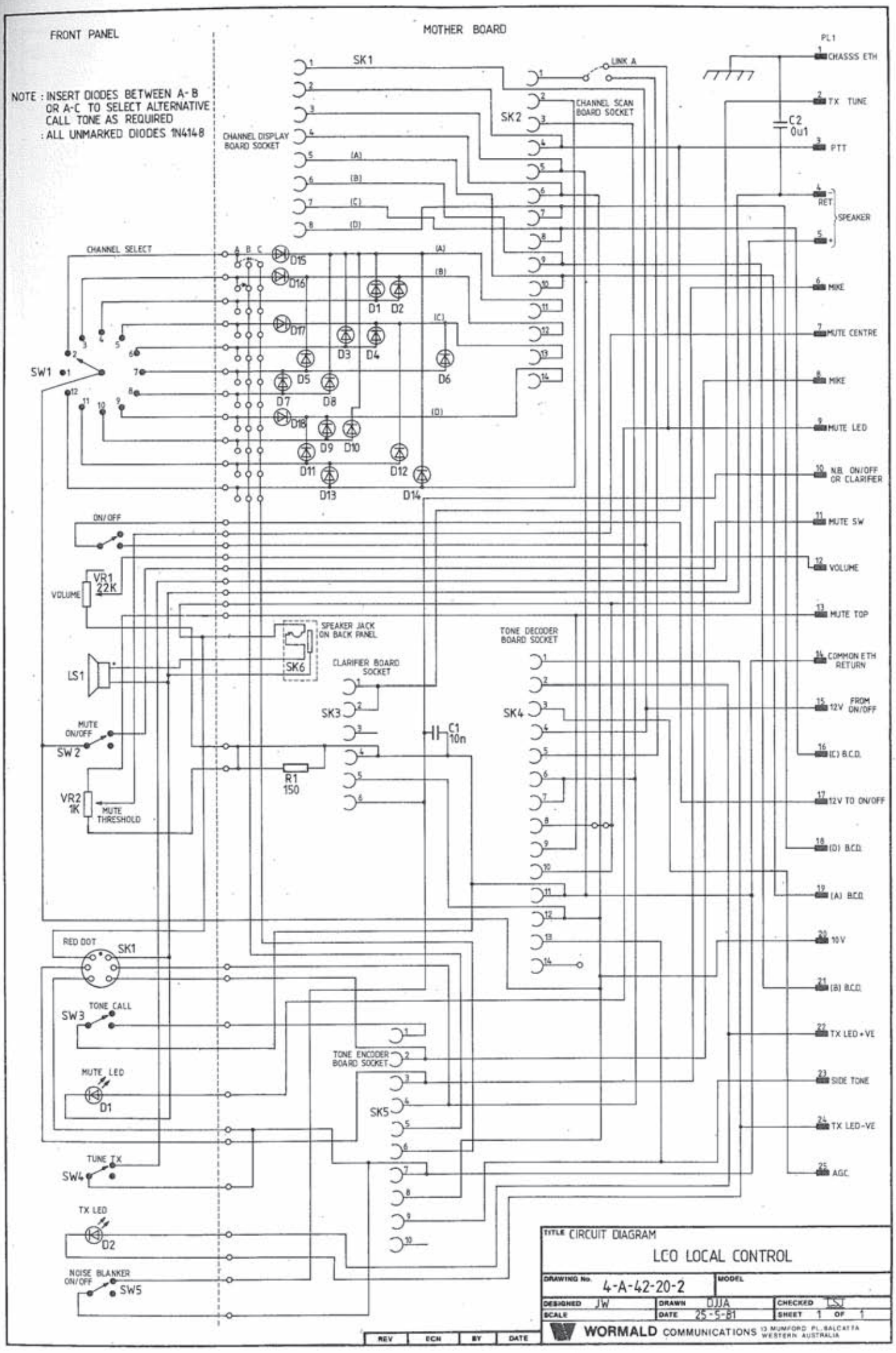
FRONT PANEL
MOTHER BOARD
NOTE : INSERT DIODES BETWEEN A-B OR A-C TO SELECT ALTERNATIVE CALL TONE AS REQUIRED
: ALL UNMARKED DIODES 1N4148
SK1
SK2
LINK A
CHANNEL SCAN BOARD SOCKET
CHANNEL DISPLAY BOARD SOCKET
PL1
CHASSS ETH
TX TUNE
C2 0u1
PTT
RET
SPEAKER
MIKE
MUTE CENTRE
MIKE
MUTE LED
N.B. ON/OFF OR CLARIFIER
MUTE SW
VOLUME
MUTE TOP
COMMON ETH RETURN
12V FROM ON/OFF
(C) B.C.D.
12V TO ON/OFF
(D) B.C.D.
(A) B.C.D.
10V
(B) B.C.D.
TX LED +VE
SIDE TONE
TX LED -VE
AGC
CHANNEL SELECT
SW1
D15
D16
D17
D18
D1
D2
D3
D4
D5
D6
D7
D8
D9
D10
D11
D12
D13
D14
ON/OFF
VR1 22K
VOLUME
LS1
MUTE ON/OFF
SW2
VR2 1K
MUTE THRESHOLD
SPEAKER JACK ON BACK PANEL
SK6
CLARIFIER BOARD SOCKET
SK3
R1 150
C1 10n
TONE DECODER BOARD SOCKET
SK4
RED DOT
SK1
SW3
TONE CALL
MUTE LED
D1
TONE ENCODER BOARD SOCKET
SK5
TUNE TX
SW4
TX LED
D2
NOISE BLANKER ON/OFF
SW5
TITLE CIRCUIT DIAGRAM
LCO LOCAL CONTROL
DRAWING No. 4-A-42-20-2
MODEL
DESIGNED JW
DRAWN DJJA
CHECKED
SCALE
DATE 25-5-81
SHEET 1 OF 1
WORMALD COMMUNICATIONS 13 MUMFORD PL. BALCATTA WESTERN AUSTRALIA
REV
ECN
BY
DATE

CCT.REF	DESCRIPTION	STORE CODE	MFG	MFG CODE
A1.20	CCT.BOARD; LCO LOCAL CONTROL	6019	WOCO	4.A.92.20.10
C1.20	CAP,FXD,CER; 10n,63V	1304	PHIL	629 SERIES
C2.20	CAP,FXD,CER; 100n,50V	1015		
D1.20	DIODE; G.P. SMALL SIGNAL	3302	FAIR	1N4148
D2.20	DIODE; G.P. SMALL SIGNAL	3302	FAIR	1N4148
D3.20	DIODE; G.P. SMALL SIGNAL	3302	FAIR	1N4148
D4.20	DIODE; G.P. SMALL SIGNAL	3302	FAIR	1N4148
D5.20	DIODE; G.P. SMALL SIGNAL	3302	FAIR	1N4148
D6.20	DIODE; G.P. SMALL SIGNAL	3302	FAIR	1N4148
D7.20	DIODE; G.P. SMALL SIGNAL	3302	FAIR	1N4148
D8.20	DIODE; G.P. SMALL SIGNAL	3302	FAIR	1N4148
D9.20	DIODE; G.P. SMALL SIGNAL	3302	FAIR	1N4148
D10.20	DIODE; G.P. SMALL SIGNAL	3302	FAIR	1N4148
D11.20	DIODE; G.P. SMALL SIGNAL	3302	FAIR	1N4148
D12.20	DIODE; G.P. SMALL SIGNAL	3302	FAIR	1N4148
D13.20	DIODE; G.P. SMALL SIGNAL	3302	FAIR	1N4148
D14.20	DIODE; G.P. SMALL SIGNAL	3302	FAIR	1N4148
D15.20	DIODE; G.P. SMALL SIGNAL	3302	FAIR	1N4148
D16.20	DIODE; G.P. SMALL SIGNAL	3302	FAIR	1N4148
D17.20	DIODE; G.P. SMALL SIGNAL	3302	FAIR	1N4148
D18.20	DIODE: G.P. SMALL SIGNAL	3302	FAIR	1N4148
R1.20	RES,FXD,CBN: 150,.25W,5%	0239	PHIL	CR25
SK1.20	SOCKET; HEADER 36 CONTACTS (8 REQ'D)	4032	A & P	929974
SK2.20	SOCKET; HEADER 36 CONTACTS (14 REQ)	4032	A & P	929974
SK3.20	SOCKET; HEADER 36 CONTACTS (6 REQ'D)	4032	A & P	929974
SK4.20	SOCKET; HEADER 36 CONTACTS (14 REQ)	4032	A & P	929974
SK5.20	SOCKET; HEADER 36 CONTACTS (10 REQ)	4032	A & P	929974
ST1.20	STAND OFF; CPVC ½" LONG HEXG	4910	RICH	HS4-4
ST2.20	STAND OFF; CPVC ½" LONG HEXG	4910	RICH	HS4-4
ST3.20	STAND OFF; CPVC ½" LONG HEXG	4910	RICH	HS4-4
ST4.20	STAND OFF; CPVC ½" LONG HEXG	4910	RICH	HS4-4
ST5.20	STAND OFF; CPVC ½" LONG HEXG	4910	RICH	HS4-4
ST6.20	STAND OFF; CPVC ½" LONG HEXG	4910	RICH	HS4-4
ST7.20	STAND OFF; CPVC ½" LONG HEXG	4910	RICH	HS4-4
ST8.20	STAND OFF; CPVC ½" LONG HEXG	4910	RICH	HS4-4
ST9.20	STAND OFF; CPVC ½" LONG HEXG	4910	RICH	HS4-4
ST10.20	STAND OFF; CPVC ½" LONG HEXG	4910	RICH	HS4-4
ST11.20	STAND OFF; CPVC ½" LONG HEXG	4910	RICH	HS4-4
ST12.20	STAND OFF; CPVC ½" LONG HEXG	4910	RICH	HS4-4
ST13.20	STAND OFF; CPVC ½" LONG HEXG	4910	RICH	HS4-4
ST14.20	STAND OFF; CPVC ½" LONG HEXG	4910	RICH	HS4-4

REV	ECN	BY	DATE

TITLE PARTS LISTING 4.A.23.20
LCO LOCAL CONTROL

DRAWING No | MODEL

DESIGNED | DRAWN | CHECKED
SCALE | DATE | SHEET OF

WORMALD COMMUNICATIONS 13 MUMFORD PLACE, BALCATTA, 6023, W.A.

CCT.REF	DESCRIPTION	STORE CODE	MFG	MFG CODE
A1.20	CCT.BRD; L.C.O. LOCAL CONTROL	6019	WOCO	4.A.93.20
D1.50	DIODE; LIGHT EMITTING - GREEN	2902	SIEM	CQY94
D2.50	DIODE; LIGHT EMITTING - RED	2901	SIEM	CQY24A
PL1.20	PLUG 25 PIN D CONNECTOR	4430	AMPH	
LS1.50	LOUDSPEAKER 4 OHM	7004	MAG	
SK1.50	SOCKET; HI-ROSE 6 PIN	4304	HI-R	
SK6.50	SOCKET; CHASSIS 3.5MM	4215		
SW1.50	SWITCH; 12 POSITION	5511	LRLN	CK1024
SW3.50	SWITCH; MOMENTARY, SPDT	5507	C & K	8121
SW4.50	SWITCH; MINI TOGGLE, SPDT	5504	PHIL	7109
SW5.50	SWITCH; TOGGLE, ON NONE ON	5501	C & K	7101

REV	ECN	BY	DATE

TITLE PARTS LISTING 4.A.23.50
LCO LOCAL CONTROL

DRAWING No. | MODEL

DESIGNED | DRAWN | CHECKED
SCALE | DATE | SHEET OF

WORMALD COMMUNICATIONS 13 MUMFORD PLACE, BALCATTA, 6021, W.A.

SECTION TEN

L.C.D. CHANNEL DISPLAY

This option unit, used with the RFK105 L.C.O., consists of a display P.C.B. and a drive P.C.B. Both are connected together by means of soldering and flat connection cable.

The unit is an entity on its own and connected to the main P.C.B. by means of a plug and socket. The drive to it consists of DC supply voltage, B.C.D. coded channel switching and a P.T.T. inhibit for use with duplex working only.

The displayed frequency is generated by the C-MOS prom HM6611 (IC3). This unit is preprogrammed at the factory with the appropriate channel frequencies used in the particular transceiver. The clock rate is generated by IC1a which in turn drives the devide by 8 counter (IC2) and clocks the seven segment drivers. The output of IC2 drives the address inputs of IC3 and strobes the segment drivers IC4 - IC5 - IC6 and IC7 for multiplexing. The dot point on the display is controlled by the segment output G1 and MSD. If only a number one is displayed as first digit, then DP2 will be energised and displayed. On all other digits DP1 is energised. Pin 1 of the PROM (IC3) is strapped to negative in simplex. When working duplex, the P.T.T. will switch the display from receive to transmit frequency (the strap has to be removed for this function).

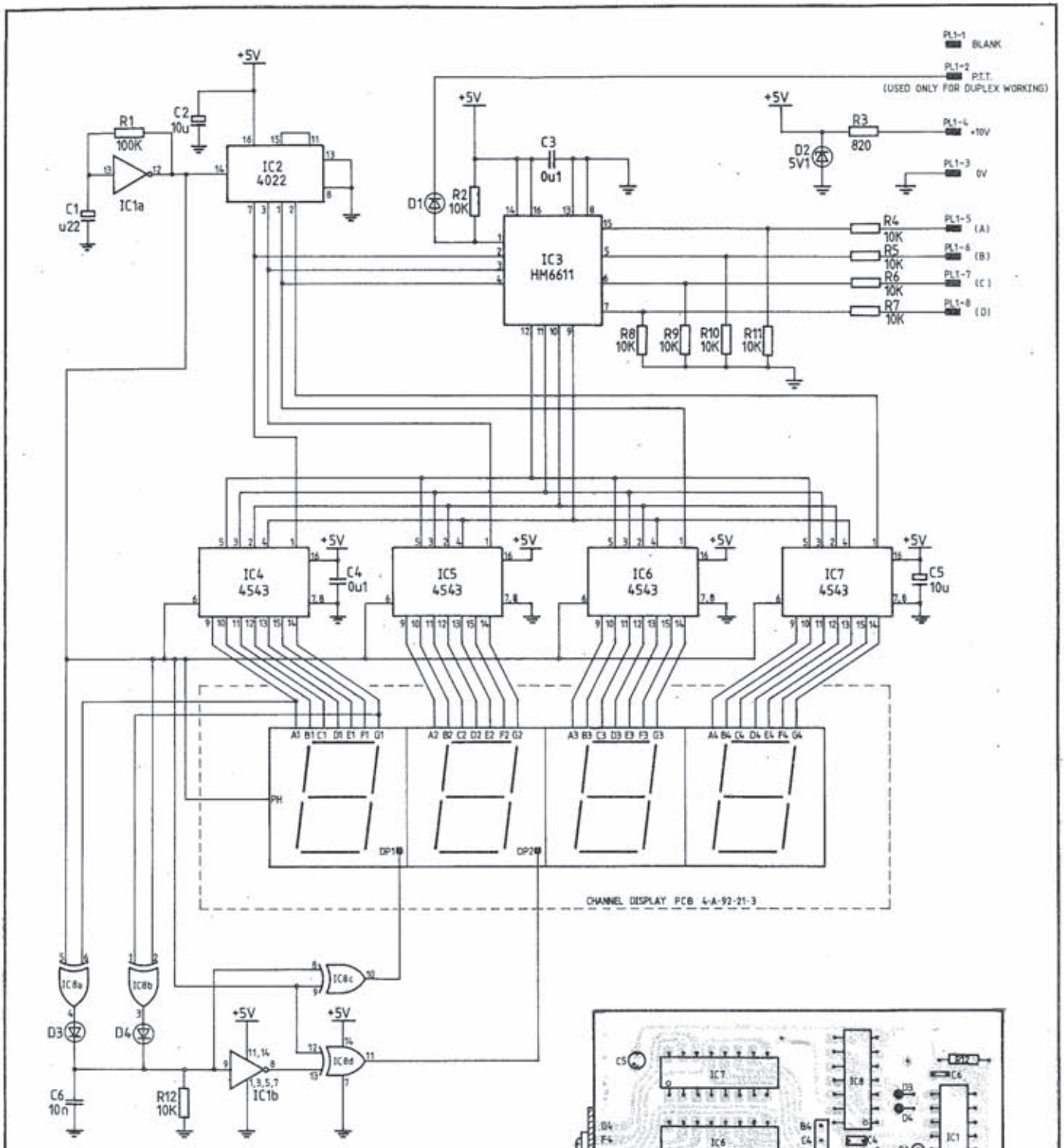

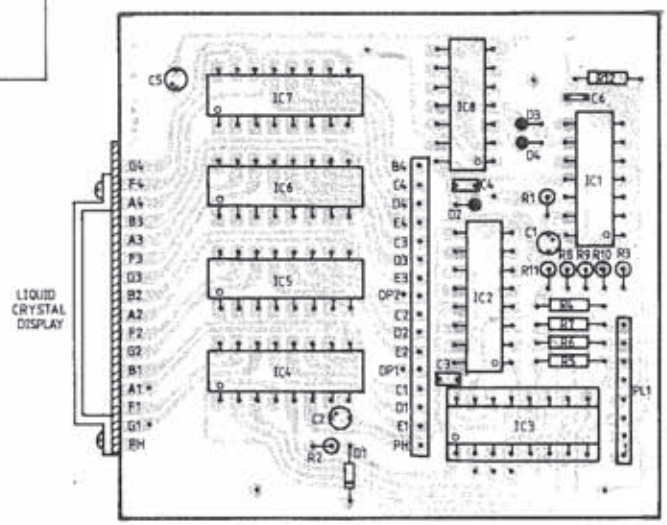

CHANNEL DISPLAY DRIVER

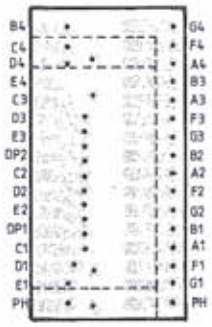

CHANNEL DISPLAY REAR VIEW

NOTE: IC1 IS 40106.
IC8 IS 4070.
ALL UNASSIGNED DIODES ARE 1N4148.

REV	ECN	BY	DATE

TITLE COMPONENT LAYOUT and CIRCUIT DIAGRAM

SSB LCD CHANNEL DISPLAY

DRAWING No. 4·A·12/42·14	MODEL	
DESIGNED J.W.	DRAWN G.E.M.	CHECKED D.A.
SCALE	DATE 22/5/81	SHEET 1 OF 1

WORMALD COMMUNICATIONS
13 MUMFORD PLACE, BALCATTA, 6021, W.A.

CCT.REF	DESCRIPTION	STORE CODE	MFG	MFG CODE
A1.14	CCT.BOARD; CHANNEL DISPLAY DRIVER	6001	WOCO	4.A.92.14.6
A2.21	CCT.BOARD; CHANNEL DISPLAY	6002	WOCO	4.A.92.21.3
C1.14	CAP,FXD,TANT; u22,16V	1643		
C2.14	CAP,FXD,TANT; 10u,16V	1651		
C3.14	CAP,FXD,CER: 0u1,50V	1015		
C4.14	CAP,FXD,CER; 0u1,50V	1015		
C5.14	CAP,FXD,TANT; 10u,16V	1651		
C6.14	CAP,FXD,CER; 10n,63V	1304	PHIL	629 SERIES
D1.14	DIODE; G.P. SMALL SIGNAL	3302	FAIR	1N4148
D2.14	DIODE; ZENER; 5V1	3318	FAIR	BZY88
D3.14	DIODE; G.P. SMALL SIGNAL	3302	FAIR	1N4148
D4.14	DIODE; G.P. SMALL SIGNAL	3302	FAIR	1N4148
IC1.14	INT.CCT; HEX SCHMITT INVERTER	2410	PHIL	HEF 40106
IC2.14	INT.CCT; COUNTER DIVIDER	2378	NSC	CD4022
IC3.14	INT.CCT; CMOS ROM	2426	HARR	HM6611-5
IC4.14	INT.CCT; DISPLAY DRIVER	2425	NSC	CD4543
IC5.14	INT.CCT; DISPLAY DRIVER	2425	NSC	CD4543
IC6.14	INT.CCT; DISPLAY DRIVER	2425	NSC	CD4543
IC7.14	INT.CCT; DISPLAY DRIVER	2425	NSC	CD4543
IC8.14	INT.CCT; EXCLUSIVE OR	2418	MOT	4070
PL1.14	PLUG; FEMALE HEADER (8 CONTACTS)	4032	A & P	929974
R1.14	RES,FXD,CBN; 100K,.25W,5%	0273	PHIL	CR25
R2.14	RES,FXD,CBN; 10K,.25W,5%	0261	PHIL	CR25
R3.14	RES,FXD,CBN; 820,.25W,5%	0248	PHIL	CR25
R4.14	RES,FXD,CBN; 10K,.25W,5%	0261	PHIL	CR25
R5.14	RES,FXD,CBN; 10K,.25W,5%	0261	PHIL	CR25
R6.14	RES,FXD,CBN; 10K,.25W,5%	0261	PHIL	CR25
R7.14	RES,FXD,CBN; 10K,.25W,5%	0261	PHIL	CR25
R8.14	RES,FXD,CBN; 10K,.25W,5%	0261	PHIL	CR25
R9.14	RES,FXD,CBN; 10K,.25W,5%	0261	PHIL	CR25
R10.14	RES,FXD,CBN; 10K,.25W,5%	0261	PHIL	CR25
R11.14	RES,FXD,CBN; 10K,.25W,5%	0261	PHIL	CR25
R14.14	RES,FXD,CBN; 10K,.25W,5%	0261	PHIL	CR25
	LCD DISPLAY WINDOW	2941	BECK	741.4.5
	PLASTIC CARRIER FOR 2941	2942	BECK	700.15.10

TITLE PARTS LISTING - 4.A.23.14.6
SSB LCD CHANNEL DISPLAY

DRAWING No | MODEL

DESIGNED | DRAWN | CHECKED

SCALE | DATE | SHEET OF

WORMALD COMMUNICATIONS 13 MUMFORD PLACE, BALCATTA, 6021, W.A.

REV | ECN | BY | DATE

SECTION ELEVEN

S.S.B. CHANNEL SCAN

OPERATION

When the channel switch is in position 1 to 11, the channel 12 line is low and the A B C D input lines are repeated through the I.C. and go out to operate the radio.

When channel 12 is selected, the input lines are disconnected and the output lines are driven by the 40160 (IC1) counter. Pin 10 of 40106 (IC2) goes low and holds the base of the P.T.T. transistor low inhibiting P.T.T.

The unit always scans channel 1 up to a channel selected (in binary) by placing diodes from the A - D output lines to Pin 13 of 40106 (IC2).

The scan oscillator is around Pin 1 - 2 of 40106 ((C2) and is also enabled by going to channel 12. It is disabled by the Mute led line, (or the tone decoder if fitted).

A second oscillator Pin 3 - 4 of 40106 (IC2) is enabled when not on channel 12 and clocks the 40160 (IC1) to repeat the channel switch to its output.

To install in L.C.O. the A B C D channel links must be cut and also the P.T.T. link.

A link must be fitted to either the mute led or 2 tone decoder, to stop the scan.

L.C.D. option must be fitted to enable user to know what channel scanner has stopped on.

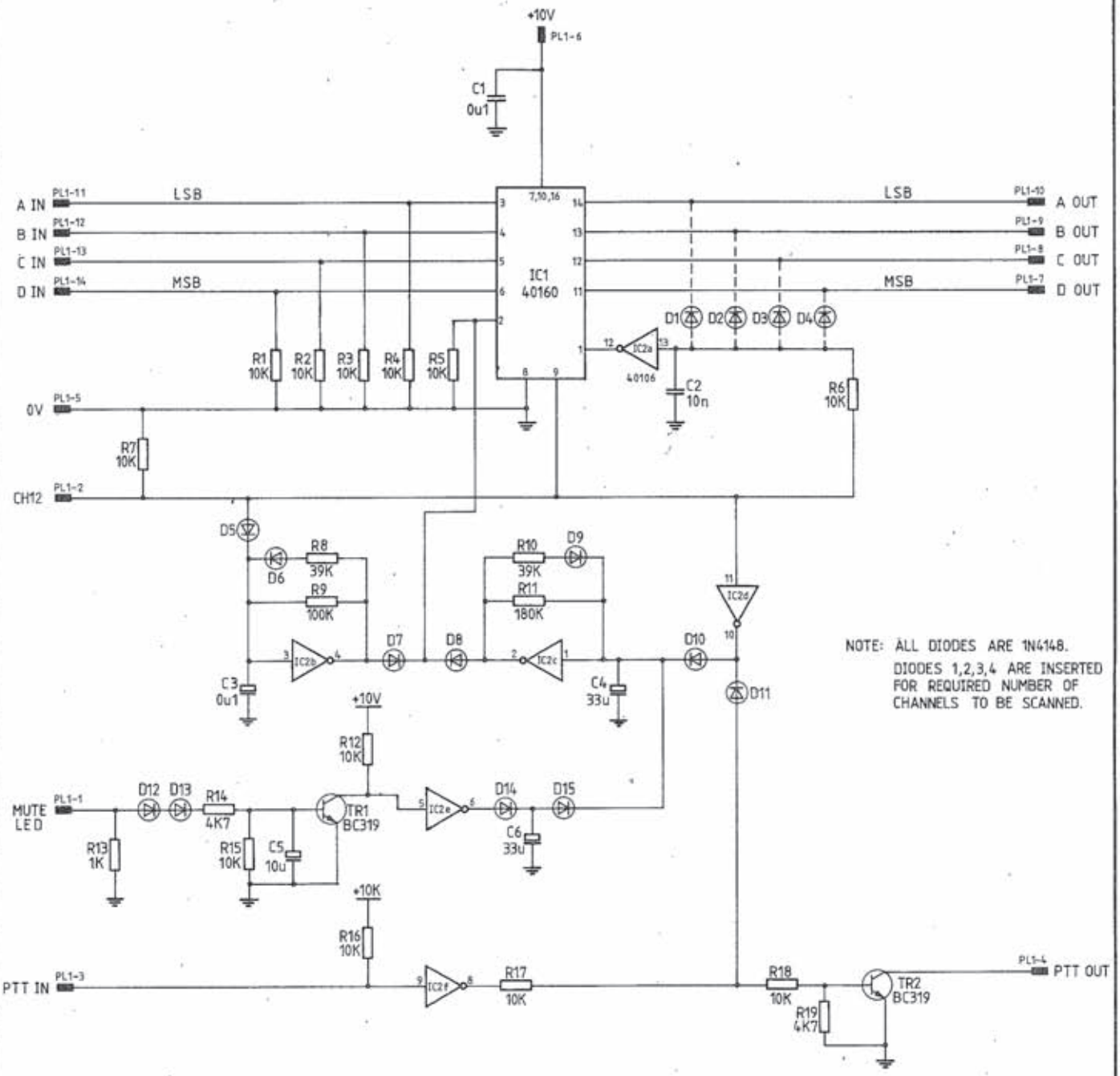

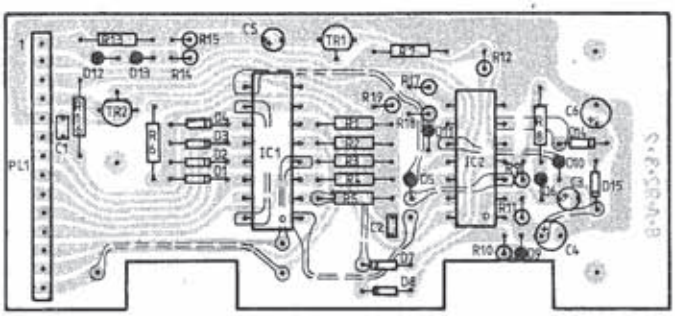

TITLE – COMPONENT LAYOUT & CIRCUIT DIAGRAM

SSB CHANNEL SCAN (PLUG-IN)

DRAWING No. 8·A·12/42·3·2		MODEL	
DESIGNED I.R.	DRAWN G.E.M.	CHECKED I.R.	
SCALE	DATE 7/4/81	SHEET 1 OF 1	

REV	ECN	BY	DATE
GEM		I.R.	7/4/81

WORMALD COMMUNICATIONS

13 MUMFORD PLACE, BALCATTA, 6021 W.A.

CCT.REF	DESCRIPTION	STORES CODE	MFG	MFG CODE
A1.3	CCT.BOARD; CHANNEL SCAN (PLUG-IN)	6018	WOCO	8.A.92.3.1
C1.3	CAP,FXD,CER; 0u1,50V	1015	PHIL	MULTI LAYER
C2.3	CAP,FXD,CER; 10n,63V	1304	PHIL	629 SERIES
C3.3	CAP,FXD,TANT; 0u1,35V	1681		
C4.3	CAP,FXD,TANT; 33u,16V	1654		
C5.3	CAP,FXD,TANT; 10u,16V	1651		
C6.3	CAP,FXD,TANT; 33u,16V	1654		
D1.3	DIODE; G.P. SMALL SIGNAL	3302	FAIR	IN4148
D2.3	DIODE; G.P. SMALL SIGNAL	3302	FAIR	IN4148
D3.3	DIODE; G.P. SMALL SIGNAL	3302	FAIR	IN4148
D4.3	DIODE; G.P. SMALL SIGNAL	3302	FAIR	IN4148
D5.3	DIODE; G.P. SMALL SIGNAL	3302	FAIR	IN4148
D6.3	DIODE; G.P. SMALL SIGNAL	3302	FAIR	IN4148
D7.3	DIODE; G.P. SMALL SIGNAL	3302	FAIR	IN4148
D8.3	DIODE; G.P. SMALL SIGNAL	3302	FAIR	IN4148
D9.3	DIODE; G.P. SMALL SIGNAL	3302	FAIR	IN4148
D10.3	DIODE; G.P. SMALL SIGNAL	3302	FAIR	IN4148
D11.3	DIODE; G.P. SMALL SIGNAL	3302	FAIR	IN4148
D12.3	DIODE; G.P. SMALL SIGNAL	3302	FAIR	IN4148
D13.3	DIODE; G.P. SMALL SIGNAL	3302	FAIR	IN4148
D14.3	DIODE; G.P. SMALL SIGNAL	3302	FAIR	IN4148
D15.3	DIODE; G.P. SMALL SIGNAL	3302	FAIR	IN4148
IC1.3	INT,CCT; PRESETABLE COUNTER	2411	FAIR	40160PC
IC2.3	INT,CCT; HEX SCHMITT TRIGGER	2410	PHIL	40106BE
PL1.3	PLUG; 14 PIN	4039		
R1.3	RES,FXD,CBN; 10K,.25W,5%	0261	PHIL	CR25
R2.3	RES,FXD,CBN; 10K,.25W,5%	0261	PHIL	CR25
R3.3	RES,FXD,CBN; 10K,.25W,5%	0261	PHIL	CR25
R4.3	RES,FXD,CBN; 10K,.25W,5%	0261	PHIL	CR25
R5.3	RES,FXD,CBN; 10K,.25W,5%	0261	PHIL	CR25
R6.3	RES,FXD,CBN; 10K,.25W,5%	0261	PHIL	CR25
R7.3	RES,FXD,CBN; 10K,.25W,5%	0261	PHIL	CR25
R8.3	RES,FXD,CBN; 39K,.25W,5%	0268	PHIL	CR25
R9.3	RES,FXD,CBN; 100K,.25W,5%	0273	PHIL	CR25
R10.3	RES,FXD,CBN; 39K,.25W,5%	0268	PHIL	CR25
R11.3	RES,FXD,CBN; 180K,.25W,5%	0276	PHIL	CR25
R12.3	RES,FXD,CBN; 10K,.25W,5%	0261	PHIL	CR25
R13.3	RES,FXD,CBN; 1K,.25W,5%	0249	PHIL	CR25
R14.3	RES,FXD,CBN; 4K7,.25W,5%	0257	PHIL	CR25
R15.3	RES,FXD,CBN; 10K,.25W,5%	0261	PHIL	CR25
R16.3	RES,FXD,CBN; 10K,.25W,5%	0261	PHIL	CR25
R17.3	RES,FXD,CBN; 10K,.25W,5%	0261	PHIL	CR25
R18.3	RES,FXD,CBN; 10K,.25W,5%	0261	PHIL	CR25
R19.3	RES,FXD,CBN; 4K7,.25W,5%	0257	PHIL	CR25
TR1.3	TRANSISTOR; NPN,30V,200mA,500mW	2201	NSC	BC319
TR2.3	TRANSISTOR; NPN,30V,200mA,500mW	2201	NSC	BC319

REV	ECN	BY	DATE

TITLE PARTS LIST - 8.A.23.3.2
SSB CHANNEL SCAN (PLUG-IN)

DRAWING No. | MODEL
DESIGNED | DRAWN | CHECKED
SCALE | DATE | SHEET OF

WORMALD COMMUNICATIONS 13 MUMFORD PLACE, BALCATTA, 6021 W.A.

SECTION TWELVE

TWO TONE SIMULTANEOUS DECODER

CIRCUIT DESCRIPTION

The two tone simultaneous decoder isolates the two tones, mixes them and applies the difference frequency to a phase locked loop decoder.

IC1a and b have centre frequencies corresponding to the tones to be decoded. Normally one of the two tones is fixed at 880 Hz while the other tone is varied depending on what difference frequency is required. Therefore, IC1a is tuned to a centre frequency of 880 Hz but components R1, R2 and R3 around IC1b have to be selected for a particular frequency band. (See table 1).

IC2 mixes the two tones and the sum and difference frequencies appear at Pin 2. IC2 is designed to run at a potential around 6 volts. D1 and its feed resistor R7 provide a regulated 6.8 V supply.

The centre frequencies of the bandpass filters IC1c and IC2d must be tuned to the difference frequency of the two tones, (See Table 1). The output from these filters is then applied to the phase lock loop decoder IC3. The frequency of the internal VCO is determined by R20, R21, the frequency trim preset VR1 and C16, the timing capacitor. The bandwidth of the decoder is set to 20 Hz by R19.

Pin 5 of IC3 goes low for the duration of a correct tone being decoded. This drives Pin 12 of IC4, a hex schmitt trigger, high which then charges C20 via R22. After approximately 2 seconds, C20 is charged high enough to trigger IC4b. This delay period eliminates short"on frequency" tone bursts from being decoded. IC4b and c form a latch circuit. When Pin 11 of IC4 goes high, it turns the latch on and it will stay in this state until rest by the P.T.T. being pressed. The high at Pin 8 of IC4c turns TR1 on which lights the "CALL RECEIVED" LED. A high is also applied to Pin 5 of IC4d driving Pin 6 of IC4d low for a period (30 seconds) determined by C22 and R24. This allows IC4e to oscillate at a frequency of about 1Hz. This pulses IC4f which is set up to oscillate at 1KHz. These 1KHz pulses are fed via PL1-13 to the tone input of the set.

TR2 is also pulsed on and off by IC4e driving an auxiliary output capable of sinking a max of 100mA. This can be used to drive horn relays or similar alarm devices.

The voltage supply to IC1 and IC3 is regulated by D2 and its feed resistor R17. A half rail voltage is generated by R34, R35 and C26, to supply the reference inputs of IC1.

There is also the facility to mount a signal strength meter on the board when the option is being used in conjunction with a H.F. transceiver. PL1-3 is driven by the receiver A.G.C. line and drives the meter via TR3. During transmit, the meter is driven by TR4 which is connected via PL1-2 and PL1-1 across the transmit LED. R33 supplies a light installed in the meter.

2 TONE SIMULTANEOUS DECODER

SET UP PROCEDURE

TEST EQUIPMENT:-

1. Two Tone Simultaneous Audio Sinewave Generator.
2. Audio Frequency Counter.
3. Cathode Ray Oscilloscope.
4. Times 10 CRO Probe.

SET UP:-

1. IC1a and IC1b are designed as bandpass filters and must be set up to pass the two frequencies of the tone. One of the two tones is usually 880 Hz so IC1a should already by set up to pass this frequency. The components R1, R2 and R3 around IC1b must be selected from TABLE 1 to pass the frequency of the second tone.

2. IC1c and IC2d are also bandpass filters designed to pass the difference frequency of the two tones. Components R8, R9, R10, R11, R12 and R13 must be selected from Table 1 to pass this difference frequency.

3. Instal the board in the set and turn on. Set the two tone simultaneous audio generator to the two required tones and apply it to the tone input PL1-9 at a level of 1V p-p. Connect a C.R.O. to Pin 7 of IC1. There should be approximately 0.1V p-p of the difference frequency present at this point.

4. Set the "FREQ" preset midway, on IC3 short Pin 2 to Pin 10 and remove C14, connect the frequency counter via an X10 probe to Pin 3 and measure fo, select R20 so that the internal oscillator of IC3 runs at the difference frequency of the two input tones. Re-apply the two tone input and connect a C.R.O. to Pin 11 of IC3. With the C.R.O. D.C. coupled, adjust the "FREQ" preset so that the trace is steady at 5V D.C. This indicates that the P.L.L. is locked and Pin 5 should go LOW.

5. Check that Pin 4 of IC4 pulses high and low and that pulses of tone appear at Pin 2 of IC4, for approximately 30 seconds.

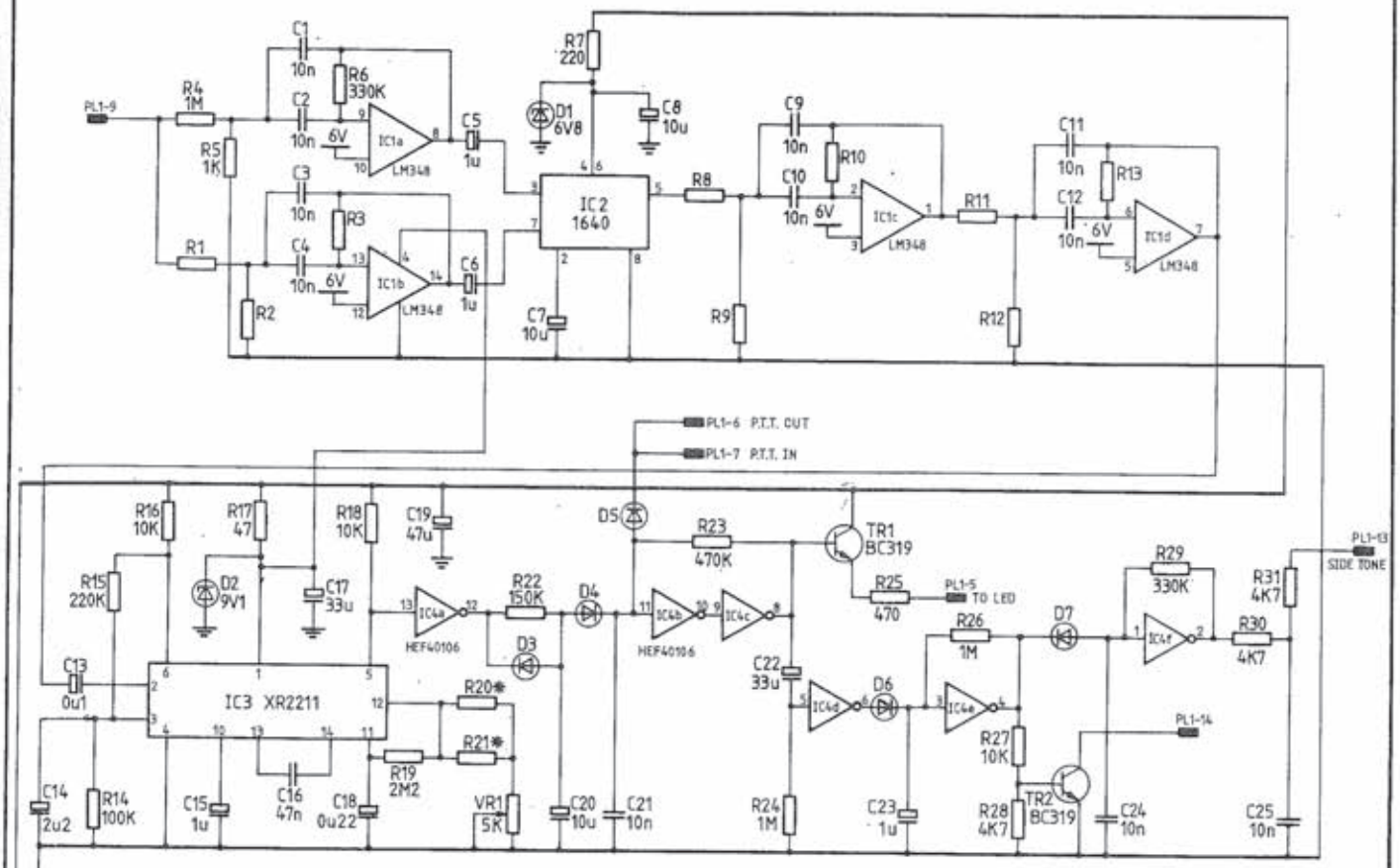

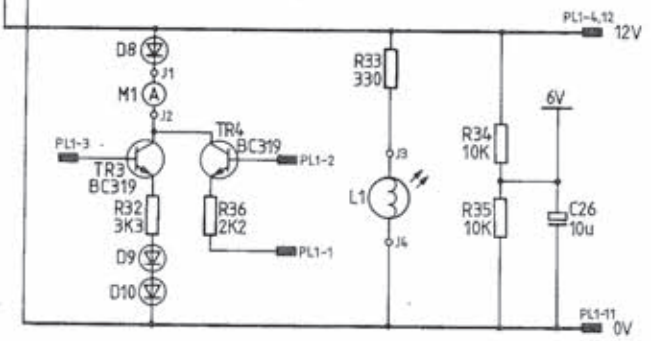

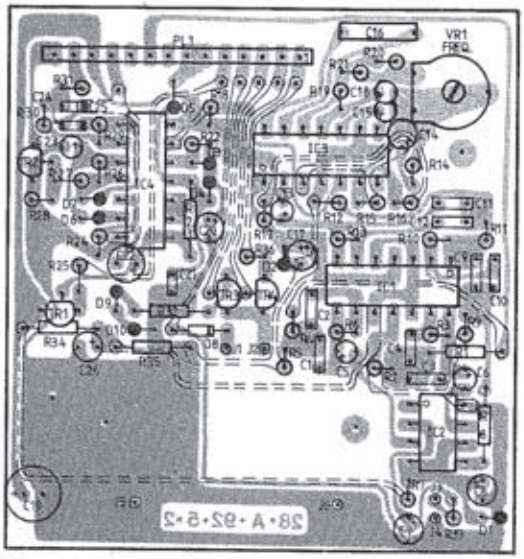

NOTE: * HIGH STABILITY COMPONENTS.
ALL UNASSIGNED DIODES ARE 1N4148.
ALL UNASSIGNED RESISTORS ARE S.O.T.
AND ARE REFERED TO IN FREQUENCY TABLE.

TITLE - CIRCUIT DIAGRAM & COMPONENT LAYOUT			
2 TONE SIMULTANEOUS DECODER			
DRAWING No. 28·A·12/42·5·4		MODEL	
DESIGNED J.W.	DRAWN G.E.M.	CHECKED J.W.	
SCALE	DATE 2/4/81	SHEET 1 OF 1	
WORMALD COMMUNICATIONS		13 MUMFORD PLACE, BALCATTA, 6021, W.A.	

REV	ECN	BY	DATE

TONE FREQ.f2	R1	R2	R3	R8	R9	R10	R11	R12	R13
1200 ± 50 Hz	270K	1K8	100K	56K	8K2	470K	180K	5K6	330K
1300 ± 50 Hz	220K	1K5	100K	47K	5K6	330K	150K	3K9	270K
1400 ± 50 Hz	270K	1K2	110K	33K	4K7	270K	120K	3K3	220K
1500 ± 50 Hz	220K	1K2	91K	27K	3K9	220K	100K	2K7	220K
1600 ± 50 Hz	180K	1K2	82K	22K	3K3	220K	82K	2K7	180K

TABLE 1

COMPONENT VALUES FOR THE RANGE OF DECODABLE FREQUENCIES

NOTE: f1 is usually fixed at 873 Hz.

REV	ECN	BY	DATE

TITLE
2 TONE SIMULTANEOUS DECODER

DRAWING No 28.A.60.5.2 MODEL

DESIGNED | DRAWN | CHECKED
SCALE | DATE | SHEET OF

WORMALD COMMUNICATIONS
13 MUMFORD PLACE, BALCATTA, 6021 W.A.

CCT.REF	DESCRIPTION	STORE CORDE	MFG	MFG CODE
A1.5	CCT.BOARD; 2 TONE SIMULTANEOUS DECODER	6208	WOCO	28.A.92.5.2
C1.5	CAP,FXD,CER; 10n,63V	1304	PHIL	629 SERIES
C2.5	CAP,FXD,CER; 10n,63V	1304	PHIL	629 SERIES
C3.5	CAP,FXD,CER; 10n,63V	1304	PHIL	629 SERIES
C4.5	CAP,FXD,CER; 10n,63V	1304	PHIL	629 SERIES
C5.5	CAP,FXD,TANT; 1u0,35V	1685		
C6.5	CAP,FXD,TANT; 1u0,35V	1685		
C7.5	CAP,FXD,TANT; 10u,16V	1651		
C8.5	CAP,FXD,TANT; 10u,16V	1651		
C9.5	CAP,FXD,CER; 10n,63V	1304	PHIL	629 SERIES
C10.5	CAP,FXD,CER; 10n,63V	1304	PHIL	629 SERIES
C11.5	CAP,FXD,CER; 10n,63V	1304	PHIL	629 SERIES
C12.5	CAP,FXD,CER; 10n,63V	1304	PHIL	629 SERIES
C13.5	CAP,FXD,TANT; 1mF, 35V.	1685		
C14.5	CAP,FXD,TANT: 2u2,16V	1647		
C15.5	CAP,FXD,TANT; 1u0,35V	1685		
C16.5	CAP,FXD,POLY; 47n, 160V	0809	RS	113.976
C17.5	CAP,FXD,TANT; 33u,16V	1654		
C18.5	CAP,FXD,TANT; 0u22,35V	1683		
C19.5	CAP,FXD,ELECTR. 33mF, 25V	1858	SOAN	RBLL
C20.5	CAP,FXD,TANT; 10u,16V	1651		
C21.5	CAP,FXD,CER; 10n, 63V	1304	PHIL	629 SERIES
C22.5	CAP,FXD,TANT; 33u, 16V	1654		
C23.5	CAP,FXD,TANT:1u0,35V	1685		
C24.5	CAP,FXD,CER; 10n,63V	1304	PHIL	629 SERIES
C25.5	CAP,FXD,CER; 10n,63V	1304	PHIL	629 SERIES
C26.5	CAP,FXD,TANT; 10u, 16V	1651		
D1.5	DIODE; ZENER, 6V8	3317		BZX88
D2.5	DIODE; ZENER, 9V1	3320		BZX88
D3.5	DIODE; G.P. SMALL SIGNAL	3302	FAIR	IN4148
D4.5	DIODE; G.P. SMALL SIGNAL	3302	FAIR	IN4148
D5.5	DIODE; G.P. SMALL SIGNAL	3302	FAIR	IN4148
D6.5	DIODE; G.P. SMALL SIGNAL	3302	FAIR	IN4148
D7.5	DIODE; G.P. SMALL SIGNAL	3302	FAIR	IN4148
D8.5	DIODE; G.P. SMALL SIGNAL	3302	FAIR	IN4148
D9.5	DIODE; G.P. SMALL SIGNAL	3302	FAIR	IN4148
D10.5	DIODE; G.P. SMALL SIGNAL	3302	FIAR	IN4148
IC1.5	INT.CCT; OP AMPS	2389	NSC	LM348
IC2.5	INT.CCT; MIXER	2384	PLES	SL1640C
IC3.5	INT.CCT; PLL	2449	EXAR	XR2211
IC4.5	INT.CCT; HEX SCMITT	2410		40106
J1.5	SMALL BOARD PIN	4404	UTIL	4737.01.08
J2.5	SMALL BOARD PIN	4404	UTIL	4737.01.08
J3.5	SMALL BOARD PIN	4404	UTIL	4737.01.08
J4.5	SMALL BOARD PIN	4404	UTIL	4737.01.08
J5.5	SMALL BOARD PIN	4404	UTIL	4737.01.08
J6.5	SMALL BOARD PIN	4404	UTIL	4737.01.08
PL1.5	PLUG, 14 PIN	4042	A & P	929834.01

REV	ECN	BY	DATE

TITLE PARTS LIST - 28.A.23.5.2
2 TONE SIMULTANEOUS DECODER

DRAWING No.		MODEL
DESIGNED	DRAWN	CHECKED
SCALE	DATE	SHEET OF

WORMALD COMMUNICATIONS 13 MUMFORD PLACE, BALCATTA, 6021, W.A.

CCT.REF	DESCRIPTION	STORE CODE	MFG	MFG CODE
R1.5	RES,FXD,CBN; SOT,25W,5%		PHIL	CR25
R2.5	RES,FXD,CBN; SOT, .25W,5%		PHIL	CR25
R3.5	RES,FXD,CBN; SOT, .25W,5%		PHIL	CR25
R4.5	RES,FXD,CBN; 1M,.25W,5%	0285	PHIL	CR25
R5.5	RES,FXD,CBN; 1K,.25Q5%	0249	PHIL	CR25
R6.5	RES,FXD,CBN; 330K,.25W,5%	0279	PHIL	CR25
R7.5	RES,FXD,CBN; 220,.25W,5%	0241	PHIL	CR25
R8.5	RES,FXD,CBN; SOT,.25S,5%		PHIL	CR25
R9.5	RES,FXD,CBN; SOT,.25W,5%		PHIL	CR25
R10.5	RES,FXD,CBN; SOT,.25W,5%		PHIL	CR25
R11.5	RES,FXD,CBN; SOT,.25W,5%		PHIL	CR25
R12.5	RES,FXD,CBN; SOT,.25W,5%		PHIL	CR25
R13.5	RES,FXD,CBN; SOT,.25W,5%		PHIL	CR25
R14.5	RES,FXD,CBN; 100K,.25W,5%	0273	PHIL	CR25
R15.5.	RES,FXD,CBN; 220K,.25W,5%	0277	PHIL	CR25
R16.5	RES,FXD,CBN; 10K,.25W,5%	0261	PHIL	CR25
R17.5	RES,FXD,CBN; 47,.25W,5%	0233	PHIL	CR25
R18.5	RES,FXD,CBN; 10K,.25W,5%	0261	PHIL	CR25
R19.5	RES,FXD,CBN; 2M2,.25W,5%	0289	PHIL	CR25
R20.5	RES,FXD,MF; .25W,SOT,2%	12	PHIL	MR25
R21.5	RES,FXD,MF; 68K, .25W,	1203	PHIL	MR25
R22.5	RES,FXD,CBN; 150K,.25W,5%	0275	PHIL	CR25
R23.5	RES,FXD,CBN; 470K,.25W,5%	0281	PHIL	CR25
R24.5	RES,FXD,CBN; 1M,.25W,5%	0285	PHIL	CR25
R25.5	RES,FXD,CBN; 470,.25W,5%	0245	PHIL	CR25
R26.5	RES,FXD,CBN; 1M,.25W,5%	0285	PHIL	CR25
R27.5	RES,FXD,CBN; 10K,.25W,5%	0261	PHIL	CR25
R28.5	RES,FXD,CBN; 4K7,.25W,5%	0257	PHIL	CR25
R29.5	RES,FXD,CBN; 330K.25W,5%	0279	PHIL	CR25
R30.5	RES,FXD,CBN; 4K7,.25W,5%	0257	PHIL	CR25
R31.5	RES,FXD,CBN; 4K7,.25W,5%	0257	PHIL	CR25
R32.5	RES,FXD,CBN; 3K3,.25W,5%	0255	PHIL	CR25
R33.5	RES,FXD,CBN; 330,.25W,5%	0243	PHIL	CR25
R34.5	RES,FXD,CBN; 10K,.25W,5%	0261	PHIL	CR25
R35.5	RES,FXD,CBN; 10K,.25W,5%	0261	PHIL	CR25
R36.5	RES,FXD,CBN; 2K2,.25W,5%	0253	PHIL	CR25
TR1.5	TRANSISTOR; NPN,30V,200mA,500mW	2201	NSC	BC319
TR2.5	TRANSISTOR; NPN,30V,200mA,500mW	2201	NSC	BC319
TR3.5	TRANSISTOR; NPN,30V,200mA,500mW	2201	NSC	BC319
TR4.5	TRANSISTOR; NPN,30V,200mA,500mW	2201	NSC	BC319
VR1.5	RES,PRESET; 5K,VTH SEALED	2532	PIHR	
M1.5	METER OPTION	7410		
L1.5	LAMP	7411		
	METER HOLDER BRACKET	8172		
	SCREW M3x6	4980		
	NUT M3	4993		
	WASHER PLAIN	4996		
	WASHER STAR	4998		

REV	ECN	BY	DATE

TITLE PARTS LIST - 28.A.23.5.2
2 TONE SIMULTANEOUS DECODER

DRAWING No. | MODEL

DESIGNED | DRAWN | CHECKED
SCALE | DATE | SHEET OF

WORMALD COMMUNICATIONS
13 MUMFORD PLACE, BALCATTA, 6021 W.A.

SECTION THIRTEEN

2 TONE SIMULTANEOUS ENCODER

This unit is designed to inject two crystal locked synthesized sinewaves into the microphone line of a radio for the purpose of tone calling.

One tone is fixed at a nominal 880 Hz, the actual frequency being 873.9 Hz. The second frequency is selected by a programmable divider IC5. One set of diodes D5, D10, D15 gives 1316 Hz and is for RFDS alarm. Two other select lines are provided on the board to enable the unit to give a total of 3 different sets of frequencies. If not selected, the RFDS tones are sent. The two lines PL1-5, 6 are capable of being selected on the mother PCB by diodes from particular channels. If diode D19 is fitted, the encoder is disabled when PL1-5 is selected by the channel switch diodes.

OPERATION

When the Tone Call button is depressed, D1 pulls the radio P.T.T. line low and TR1 is turned on and applies 10 volts to IC1A, the crystal oscillator. The output from IC1A is coupled to the divider IC2 which divides by 4,096 to give the 874 Hz tone. The oscillator also drives a programmable counter IC5. The division of IC5 is selected by diodes pulling up the appropriate preselect lines. If either line is selected, the output of IC4D goes low, turning off the RFDS tone diode selectors. The output goes to IC3 which divides it by 16. The four binary division outputs from IC3 are connected to the exclusive OR gate IC4. The outputs of IC4 are added together by R9, 10, 11 to give a sixteen step synthesized sinewave. C5 removes the steps from the waveform. Similarly IC1 gives out the 874 Hz sinewave. The audio output drives the sidetone and via T1 the microphone input.

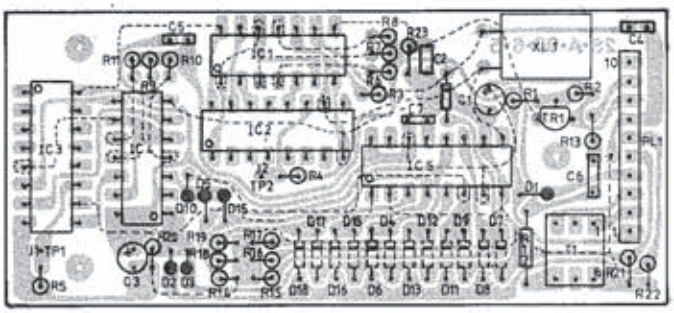

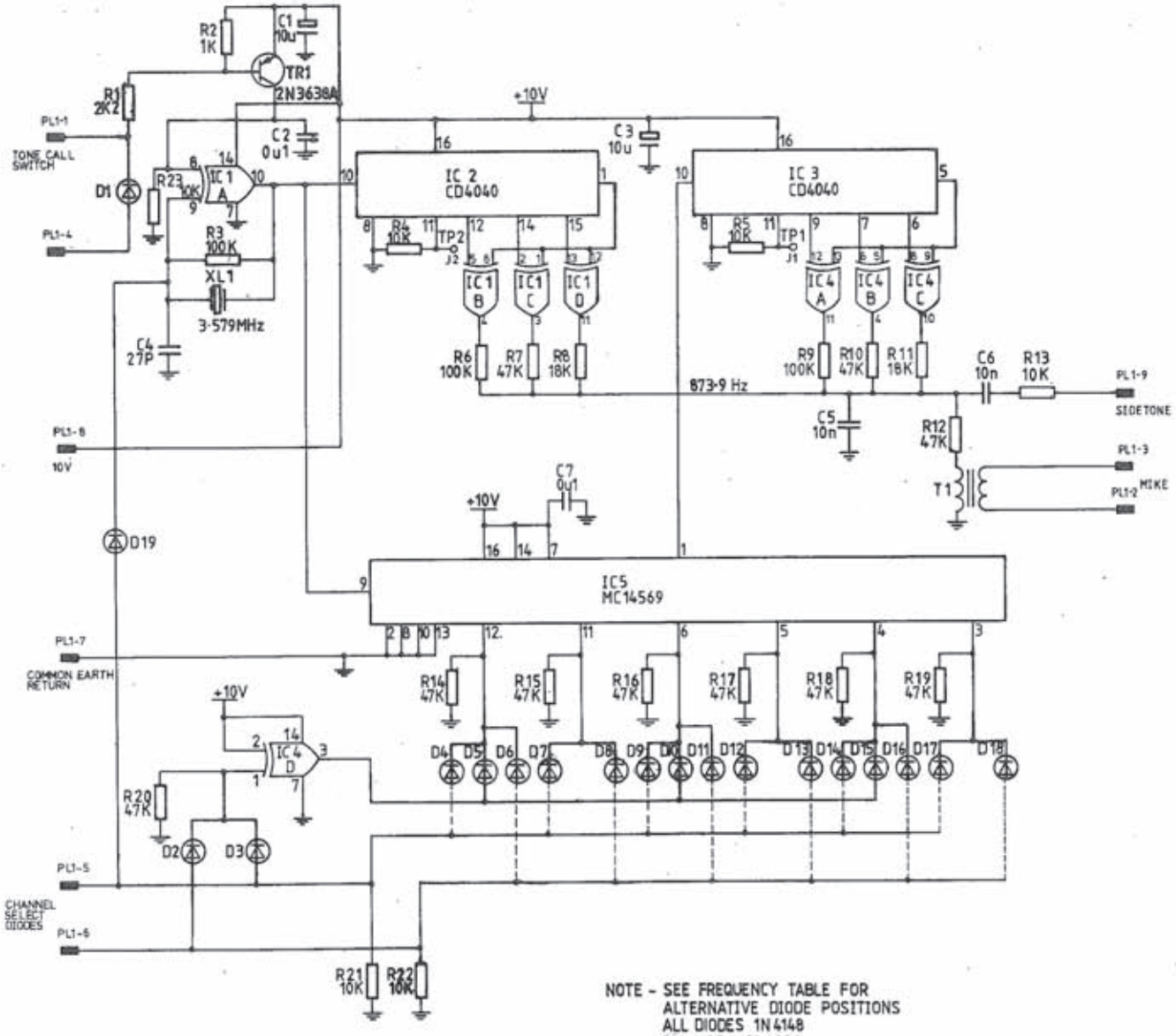

NOTE - SEE FREQUENCY TABLE FOR
ALTERNATIVE DIODE POSITIONS
ALL DIODES 1N4148
IC1 & IC4 CD4030

TITLE CIRCUIT DIAGRAM / COMPONENT			
2 TONE SIMULTANEOUS ENCODER			
DRAWING No. 28-A-12/42-6-6		MODEL 2806	
DESIGNED JW	DRAWN RW		CHECKED PL
SCALE	DATE 28-11-80		SHEET 1 OF 1
WORMALD COMMUNICATIONS			13 MUNFORD PLACE, BALCATTA, 6021, W.A.

REV	ECN	BY	DATE

		IC5 PIN NO.								IC5 PIN NO.								IC5 PIN NO.					
÷No	TONE 2 Hz	12	11	6	5	4	3	÷No	TONE 2 Hz	12	11	6	5	4	3	÷No	TONE 2 Hz	12	11	6	5	4	3
128	1747.8	0	0	0	0	0	0	150	1491.5	0	1	0	1	1	0	172	1300.7	1	0	1	1	0	0
129	1734.3	0	0	0	0	0	1	151	1481.6	0	1	0	1	1	1	173	1293.2	1	0	1	1	0	1
130	1720.9	0	0	0	0	1	0	152	1471.9	0	1	1	0	0	0	174	1285.8	1	0	1	1	1	0
131	1707.8	0	0	0	0	1	1	153	1462.2	0	1	1	0	0	1	175	1278.4	1	0	1	1	1	1
132	1694.9	0	0	0	1	0	0	154	1452.7	0	1	1	0	1	0	176	1271.1	1	1	0	0	0	0
133	1682.1	0	0	0	1	0	1	155	1443.4	0	1	1	0	1	1	177	1264.0	1	1	0	0	0	1
134	1669.6	0	0	0	1	1	0	156	1434.1	0	1	1	1	0	0	178	1256.9	1	1	0	0	1	0
135	1657.2	0	0	0	1	1	1	157	1425.0	0	1	1	1	0	1	179	1249.8	1	1	0	0	1	1
136	1645.0	0	0	1	0	0	0	158	1416.0	0	1	1	1	1	0	180	1242.9	1	1	0	1	0	0
137	1633.0	0	0	1	0	0	1	159	1407.1	0	1	1	1	1	1	181	1236.0	1	1	0	1	0	1
138	1621.2	0	0	1	0	1	0	160	1398.3	1	0	0	0	0	0	182	1229.2	1	1	0	1	1	0
139	1609.5	0	0	1	0	1	1	161	1389.6	1	0	0	0	0	1	183	1222.5	1	1	0	1	1	1
140	1598.0	0	0	1	1	0	0	162	1281.0	1	0	0	0	1	0	184	1215.9	1	1	1	0	0	0
141	1586.7	0	0	1	1	0	1	163	1372.5	1	0	0	0	1	1	185	1209.3	1	1	1	0	0	1
142	1575.5	0	0	1	1	1	0	164	1364.2	1	0	0	1	0	0	186	1202.8	1	1	1	0	1	0
143	1564.5	0	0	1	1	1	1	165	1355.9	1	0	0	1	0	1	187	1196.4	1	1	1	0	1	1
144	1553.6	0	1	0	0	0	0	166	1347.7	1	0	0	1	1	0	188	1190.0	1	1	1	1	0	0
145	1542.9	0	1	0	0	0	1	167	1339.7	1	0	0	1	1	1	189	1183.7	1	1	1	1	0	1
146	1532.3	0	1	0	0	1	0	168	1331.7	1	0	1	0	0	0	190	1177.5	1	1	1	1	1	0
147	1521.9	0	1	0	0	1	1	169	1323.8	1	0	1	0	0	1	191	1171.3	1	1	1	1	1	1
148	1511.6	0	1	0	1	0	0	170	1316.0	1	0	1	0	1	0								
149	1501.5	0	1	0	1	0	1	171	1308.3	1	0	1	0	1	1								

NOTE 2: TONE 1 is 873.9 Hz.

REV	ECN	BY	DATE

TITLE
TONE 2 FREQUENCY TABLE

DRAWING No 28-A-92-6-1 | MODEL 2806

DESIGNED | DRAWN | CHECKED
SCALE | DATE | SHEET OF

WORMALD COMMUNICATIONS
13 MUMFORD PLACE, BALCATTA, 6021, W.A.

CCT.REF	DESCRIPTION	STORES CODE	MFG	MFG CODE
A1.6	CCT.BOARD,2TONE SIMULTANEOUS ENCODER	6051	WOCO	28.A.92.6.5
C1.6	CAP,FXD,TANT; 10uF,16V	1651		
C2.6	CAP,FXD,CER; 100N,50V	1015		
C3.6	CAP,FXD,TANT; 10uF,16V	1651		
C4.6	CAP,FXD,CER; 27pF, 63V	1415	PHIL	630 SERIES
C5.6	CAP,FXD,CER; 10N,63V	1304	PHIL	629 SERIES
C6.6	CAP,FXD,POLY; 10N,100V	1510		
D1.6	DIODE; G.P. SMALL SIGNAL	3302	FAIR	1N4148
D2.6	DIODE; G.P. SMALL SIGNAL	3302	FAIR	1N4148
D3.6	DIODE; G.P. SMALL SIGNAL	3303	FAIR	1N4148
D4.6	REFER FREQ. TABLE			
D5.6	DIODE; G.P. SMALL SIGNAL	3302	FAIR	1N4148
D6.6	REFER FREQ. TABLE			
D7.6	REFER FREQ. TABLE			
D8.6	REFER FREQ. TABLE			
D9.6	REFER FREQ. TABLE			
D10.6	DIODE; G.P. SMALL SIGNAL	3302	FAIR	1N4148
D11.6	REFER FREQ. TABLE			
D12.6	REFER FREQ. TABLE			
D13.6	REFER FREQ. TABLE			
D14.6	REFER FREQ. TABLE			
D15.6	DIODE; G.P. SMALL SIGNAL	3302	FAIR	1N4148
D16.6	REFER FREQ. TABLE			
D17.6	REFER FREQ. TABLE			
D18.6	REFER FREQ. TABLE			
D19.6	DIODE; G.P. SMALL SIGNAL	3302	FAIR	1N4148
IC1.6	INT.CCT; QUAD EXCLUSIVE - OR	2437	NSC	CD4030
IC2.6	INT.CCT; 12 STAGE COUNTER	2357	NSC	CD4040
IC3.6	INT.CCT; 12 STAGE COUNTER	2357	NSC	CD4040
IC4.6	INT.CCT; QUAD EXCLUSIVE - OR	2437	NSC	CD4030
IC5.6	INT.CCT; DUAL 4-BIT COUNTER	2394	MOT	MC14569
J1.6	SMALL BOARD PIN	4404		
J2.6	SMALL BOARD PIN	4404		
PL1.6	MALE STRAIGHT PIN HEADER	4042	A & P	929834-01
R1.6	RES,FXD,CBN; 2K2,.25W,5%	0253	PHIL	CR25
R2.6	RES,FXD,CBN; 1K,.25W,5%	0249	PHIL	CR25
R3.6	RES,FXD,CBN; 100K,.25W,5%	0273	PHIL	CR25
R4.6	RES,FXD,CBN; 10K,.25W,5%	0261	PHIL	CR25
R5.6	RES,FXD,CBN; 10K,.25W,5%	0261	PHIL	CR25
R6.6	RES,FXD,CBN; 100K,.25W,5%	0273	PHIL	CR25
R7.6	RES,FXD,CBN; 47K,.25W,5%	0269	PHIL	CR25
R8.6	RES,FXD,CBN; 18K,.25W,5%	0264	PHIL	CR25
R9.8	RES,FXD,CBN; 100K,.25W,5%	0273	PHIL	CR25
R10.6	RES,FXD,CBN; 47K,.25W,5%	0269	PHIL	CR25
R11.6	RES,FXD,CBN; 18K,.25W,5%	0264	PHIL	CR25
R12.6	RES,FXD,CBN; 47K,.25W,5%	0269	PHIL	CR25
R13.6	RES,FXD,CBN; 10K,.25W,5%	0261	PHIL	CR25
R14.6	RES,FXD,CBN; 47K,.25W,5%	0269	PHIL	CR25
R15.6	RES,FXD,CBN; 47K,.25W,5%	0269	PHIL	CR25

REV	ECN	BY	DATE

TITLE PARTS LISTING 28.A.23.6.1
2 TONE SIMULTANEOUS ENCODER

DRAWING No | MODEL

DESIGNED | DRAWN | CHECKED
SCALE | DATE | SHEET OF

WORMALD COMMUNICATIONS
13 MUMFORD PLACE, BALCATTA, 6021, W.A.

CCT,REF	DESCRIPTION	STORES CODE	MFG	MFG CODE
R16.6	RES,FXD,CBN; 47K,.25W,5%	0269	PHIL	CR25
R17.6	RES,FXD,CBN; 47K,.25W,5%	0269	PHIL	CR25
R18.6	RES,FXD,CBN; 47K,.25W,5%	0269	PHIL	CR25
R19.6	RES,FXD,CBN; 47K,.25W,5%	0269	PHIL	CR25
R20.6	RES,FXD,CBN; 47K,.25W,5%	0269	PHIL	CR25
R21.6	RES,FXD,CBN; 10K,.25W,5%	0261	PHIL	CR25
R22.6	RES,FXD,CBN; 10K,.25W,5%	0261	PHIL	CR25
T1.6	TRANS, 600-600 OHMS	5101	TAM	MG21
TR1.6	TRANSISTOR: PNP,40V,500mA,500mW	2211	NSC	2N3638A
XL1.6	CRYSTAL; 3.579 MHz	7632	SKY	3.579

REV	ECN	BY	DATE

TITLE
PARTS LISTING 28.A.23.6.1
2 TONE SIMULTANEOUS ENCODER

DRAWING No. | MODEL

DESIGNED | DRAWN | CHECKED
SCALE | DATE | SHEET OF

WORMALD COMMUNICATIONS
13 MUMFORD PLACE, BALCATTA, 6021 W.A.

SECTION FOURTEEN

DESCRIPTION FOR CLARIFIER OPTION

The clarifier situated on the front end PCB of the transceivers is controlled in its function by means of a DC voltage. This variable voltage is generated on the option board plugged in the control head main PCB. An external potentiometer enables the variation of the DC voltage and clarifying the incoming receive signal by shifting the local oscillator frequency.

During the transmit period, this offset of voltage is nullified through the de-energising of two transistors feeding each end of the control potentiometer with a positive and negative voltage. The clarifier action is restabilised as soon as the unit is in the receive condition.

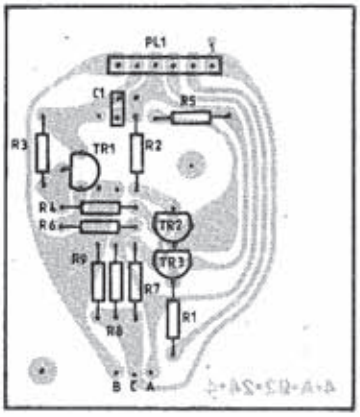

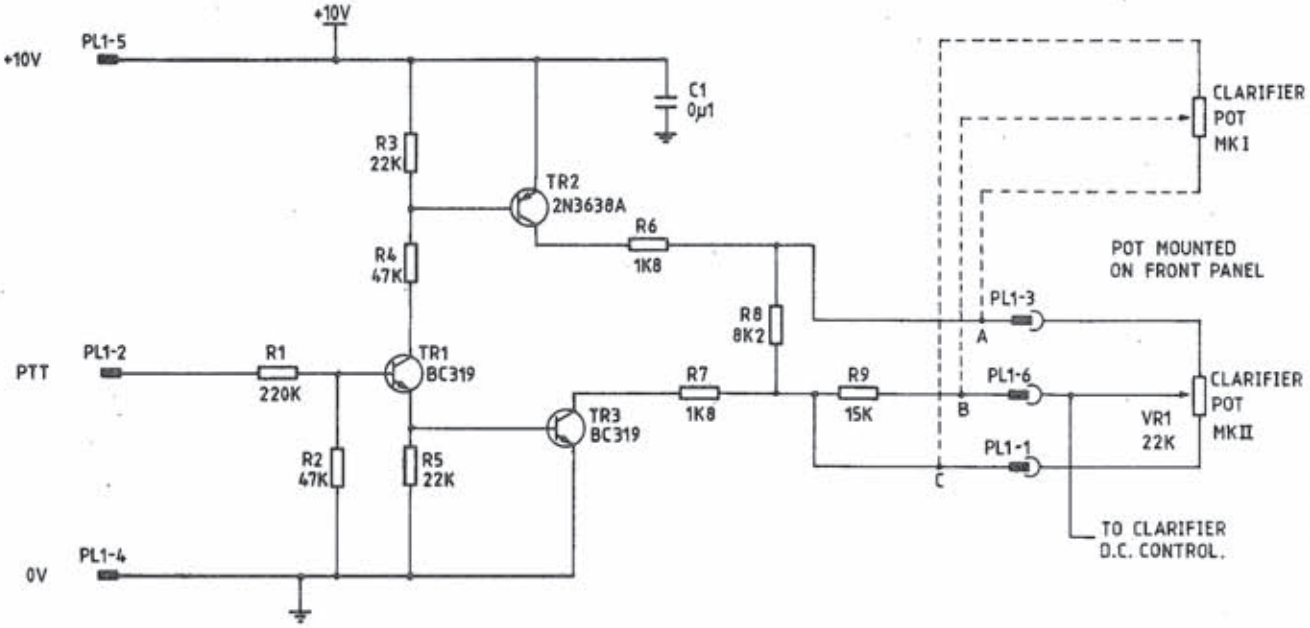

TITLE: S.S.B. D.C. CLARIFIER			
DRAWING No. 4-A-12/42-24		MODEL	
DESIGNED JW	DRAWN PB		CHECKED DA
SCALE	DATE 3/6/81		SHEET 1 OF 1

WORMALD COMMUNICATIONS — 13 MUMFORD PLACE, BALCATTA, 6021, W.A.

REV	ECN	BY	DATE

CCT.REF	DESCRIPTION	STORE CODE	MFG	MFG CODE
A1.24	CCT.BRD: D.C. CLARIFIER	6028	WOCO	4.A.92.24
C1.24	CAP,FXD,CER: 0u1,50V	1015		
PL1.24	PLUG: 6 PIN	4042	A & P	929834-01
R1.24	RES,FXD,CBN; 220K,.25W,5%	0277	PHIL	CR25
R2.24	RES,FXD,CBN; 47K,.25W,5%	0269	PHIL	CR25
R3.24	RES,FXD,CBN; 22K,.25W,5%	0265	PHIL	CR25
R4.24	RES,FXD,CBN; 47K,.25W,5%	0269	PHIL	CR25
R5.24	RES,FXD,CBN; 22K,.25W,5%	0265	PHIL	CR25
R6.24	RES,FXD,CBN; 1K8,.25W,5%	0252	PHIL	CR25
R7.24	RES,FXD,CBN; 1K8,.25W,5%	0252	PHIL	CR25
R8.24	RES,FXD,CBN; 8K2,.25W,5%	0260	PHIL	CR25
R9.24	RES,FXD,CBN; 15K,.25W,5%	0263	PHIL	CR25
TR1.24	TRANSISTOR; NPN,30V,200mA,500mW	2201	NSC	BC319
TR2.24	TRANSISTOR; PNP,40V,500mA,500mW	2211	NSC	2N3638A
TR3.24	TRANSISTOR; NPN,30V,200mA,500mW	2201	NSC	BC319
VR1.24	POTENTIOMETER; 22K, LIN	2765		

REV	ECN	BY	DATE

TITLE
PARTS LISTING 4.A.23.24.1
D.C. CLARIFIER

DRAWING No.		MODEL
DESIGNED	DRAWN	CHECKED
SCALE	DATE	SHEET OF

WORMALD COMMUNICATIONS
13 MUMFORD PLACE, BALCATTA, 6021, W.A.

SECTION FIFTEEN